Village of Centre Island

303 Centre Island Road
Oyster Bay NY, 11771
(516)922-0606

4/28/2020

Tang Fan Han
424 Centre Island Road.
Centre Island, NY, 11735

Re: **Application to build additions and alterations to existing dwelling..**

NCTM: Section **28**, Block **58**, Lot **10**, Zone **A-2**

Notice of Zoning Denial

Dear Applicant,
Your most recent application for a building permit has been DENIED for the following reason:

- Pursuant to Village of Centre Island Code, section 122-10,C, (1): The maximum permitted floor area for a dwelling with a lot area of 0.23 Acres within the A-2 zoning district is **2000 s.f.**

  *Proposed rear and side yard additions will result in a total floor area of **3100 sf** (1100 sf in excess of the maximum permitted floor area)*

Should you wish to pursue this application as submitted, a variance must be obtained from the Centre Island Board of Zoning Appeals. If you are successful in obtaining the required variance, you will then be required to submit to the Architectural Review Board for approval.

If you have any questions, please contact me at Village Hall or on my cell phone at (516) 659-0010.

Joseph E. Richardson, Building Inspector

***NOTE* BZA approval was granted to this application in December of 2017 (File no Z-2017-09). However the applicant failed to obtain the required building permit within the required time period prescribed by law.**

INCORPORATED VILLAGE OF CENTRE ISLAND
APPLICATION TO BOARD OF APPEALS FOR VARIANCE

1. Applicant(s)/Owner(s) Name: TONGFANG HAN (AMY)

2. Address: 41 HILTON AVE, GARDEN CITY, NY 11530 Phone #: 516·289·9999 516·210·5555

3. If Applicant is Contract Vendee, list name and current address of property owner(s) and attach owner's consent to the application.
TONGFANG HAN, 41 HILTON AVE, GARDEN CITY, NY 11530

4. Attorney, Engineer, or other Representative CONTRACTOR

Firm/Company Name MICHAEL AIELLO CONSTRUCTION INC.

Address 344 BAYVILLE AVE, BAYVILLE, NY Zip Code 11709

Phone # 516·922·1596 Fax # N/A

5. Description of Subject Property:

Address: 424 CENTRE ISLAND ROAD Sec. 28 Blk. 58 Lot(s) 10
Zoning District: A-Z Lot area: 10

6. Appellants became the owner of said property on: 424 CENTRE ISLAND ROAD by deed dated JUNE 14, 2017 recorded in Liber EX-DOI-DEED at page 4.

7. Has the premises at the subject address ever been the subject of a prior variance application? NO

If yes, state the date of hearing, relief requested and result _____

8. The variance involved relates to: **CHECK ALL THAT APPLY AND INCLUDE APPLICABLE SECTION OF THE ZONING CODE**

☐ Use (Section _____) ☐ Frontage (Section _____) ☐ Side Yard (Section _____)
☐ Width (Section _____) ☐ Height (Section _____) ☐ Area (Section _____)
☐ Front Yard (Section _____) ☐ Rear Yard (Section _____) ☐ Depth (Section _____)
☒ Gross Floor Area (Section 122-10C ☐ Principal Building Area (Section _____)
☐ Total Building Area (Section _____) ☐ Height/Setback Ratio (Section _____)
☐ Flood Zone Regulations (Article VI, Section _____)

Attach the Building Inspector's written denial of building permit/certificate of occupancy.

(IF MORE THAN ONE VARIANCE IS REQUESTED, PLEASE CHECK HERE [ ] AND LIST THE INFORMATION REQUIRED UNDER # 8 ON AN ADDITIONAL PAGE.)

RECEIVED SEP 10 2020

9. State the zoning requirements, the proposed dimensions, and the differences for which the variance is requested. (Example: The proposed building/addition will be only 35 feet rather than the required 50 feet from side line)

PROPOSED REAR AND SIDE YARD ADDITIONS WILL RESULT IN A TOTAL FLOOR AREA OF 3100 SF (1100 SF IN EXCESS OF THE MAXIMUM PERMITTED FLOOR AREA)

10. In making its determination, the Board of Zoning Appeals must take into consideration the benefit to the Applicant if the variance is granted weighed against the detriment to the health, safety and welfare of the neighborhood or community by such grant. In making such determination, the Board shall also consider the following. Please provide a brief explanation of the 5 items following and be prepared to address each at the time of the hearing: **(use an additional page if necessary)**

a. Will an undesirable change be produced in the character of the neighborhood or will a detriment to nearby properties be created by the granting of the area variance?

NO

b. Can the benefit sought in this appeal be achieved by some method feasible other than the requested area variance? Please explain. WE NEED ONE MORE BEDROOM AND FAMILY ROOM FOR MY FAMILY. WE HAVE 3 CHILDREN. NO MORE SPACE CAN BE USED THE THE HOUSE.

c. Is the requested area variance substantial? 1100 SF IS GOING TO BE ADDED.

NO

d. Will the granting of the proposed variance have an adverse effect or impact on the physical or environmental condition of the neighborhood? Please explain.

MOST OF MY NEIGHBORS ARE FAR FROM MY HOUSE, ONLY ONE IN THE BACK OF MY HOUSE CAN FEEL THE CHANGE. I DON'T THINK IMPACT ANY PHYSICAL OR ENVIRONMENTAL CONDITION.

e. Was the alleged difficulty necessitating the requested variance self-created by the Appellant?

YES

The Board of Zoning Appeals may grant only the minimum variance, if any, that it shall deem necessary and adequate at the same time preserve and protect the character of the neighborhood and the health, safety and welfare of the community.

11. The section, block, lot, name(s), and mailing addresses of all property owners within 100 feet of property of Appellants(s) are as follows:**(Please use an additional page if necessary)**

Sec., Blk., Lot	Name	Mailing Address (Street No.; Street; PO Box; Zip)

AFFIRMATION ON SEARCH OF NEIGHBORING PROPERTY OWNERS

_____ deposes and says:

That he/she is over the age of eighteen and resides at _____

_____

That on the day of , 200 , deponent searched the current Village or Town tax roll records and hereby certifies that such records show the above listed current title owners of the above listed properties within 100 feet of the subject premises.

I HAVE READ THE FOREGOING AND UNDERSTAND THAT ANY FALSE STATEMENT MADE THEREIN ARE PUNISHABLE AS A CLASS A MISDEMEANOR PURSUANT TO SECTION 210.45 OF THE PENAL LAW.

Date: _____ ☞ _____

Record Search Deponent's Signature

I/We, TONGFANG HAN (AMY) the Applicants/Appellants herein, do hereby authorize the members of the Board of Zoning Appeals to inspect our property as it relates to the foregoing variance application during reasonable hours and upon said Board of Zoning Appeals members providing reasonable notice of said inspection. I/We consent to the Board of Zoning Appeals members or the Clerk of the Board of Zoning Appeals to contact me/us at the phone number provided herein to arrange said inspection.

☞ Tony Han

Landowner(s) Signature(s)

Date 7/13/2020

☞ _____

Applicant(s)/Appellant(s) Signature(s)

WHEREFORE, in accordance with the foregoing alleged facts Applicant(s) request said Board of Appeals to vary the strict application of the aforesaid provision(s) of said Village's Building Zone Ordinance, to grant the relief requested and grant such other and further or lesser relief as to this Board seems just and proper.

I HAVE READ THE FOREGOING APPEAL /APPLICATION AND UNDERSTAND THAT ANY FALSE STATEMENT MADE THEREIN ARE PUNISHABLE AS A CLASS A MISDEMEANOR PURSUANT TO SECTION 210.45 OF THE PENAL LAW.

7/13/2020

Date

☞ Tony Jasman

☞

Applicant(s)/Appellant(s) Signature(s)

(Note: General Municipal Law of the State of New York, Section 809 enacted in 1969 **requires** the filing of the following completed Disclosure Statement)

DISCLOSURE STATEMENT

TONGFANG HAN deposes and says:

1. ***FOR INDIVIDUAL***

a. I am over the age of 21 and reside at 424 CENTRE ISLAND ROAD CENTRE ISLAND, NY

b. I am the OWNER of the property designated as Section 28 Block 58 Lot(s) 10
(owner contract vendee - insert one)
on the Nassau County Land and Tax Map which forms the subject matter of this application and am fully familiar with all the facts and circumstances hereinafter set forth.

1. ***FOR CORPORATION*** **(Strike out if not applicable)**

a. I am the _____ of the _____ with offices
(Office Held) (Name of Corp.)
located at: _____
and am fully familiar with all the facts and circumstances hereinafter set forth.

b. The corporation was incorporated under the Laws of the State of _____ and is the _____ of the property designated as Section ____ Block ____ Lot(s) _____ on the Nassau County Land and Tax Map.

c. The following are the names and residences of each officer, director and shareholder: (Set forth names, residences and relationship to corp.) (Add additional sheet if necessary.)

d. That the corporate stock of said corporation has not been pledged to any person nor has any agreement been made to pledge the said stock: (except: If any, set forth details.)

1. ***FOR PARTNERSHIP*** **(Strike out if not applicable.)**

a. That I am a _____ of the _____
(Partner, Joint Venturer, etc.) (Name of Partnership)
and am fully familiar with all the facts and circumstances hereinafter set forth.

b. That the above partnership was established in _____
(Place)
_____
on _____ and is the _____ of the property designated as
(Owner or Contract Vendee)
Section _____ Block _____ Lot(s) _____ on the Nassau County Land and Tax Map.

c. That the following are the names, addresses and interests, respectively, of all partners (joint venturers, etc.): (Add additional sheet if necessary)

2. That there are no encumbrances or holders of any instruments creating an encumbrance upon the subject property (except: if any set forth details.)

3. That neither deponent nor any other person mentioned in this statement is a Village officer or employee, or is related to a Village officer or employee. (except: if any set forth details.)

4. That no State Officer or employee or local municipal officer or employee in the Nassau County or his spouse or a person by consanguinity related to either of them within the third degree is (are) the Applicant(s) or an officer, director or employee of the Applicant(s), or legally or beneficially owns or controls the corporate stock of the Applicant(s) or is a partner of the Applicant(s) or associated with the Applicant(s) in a joint venture or has an agreement with the Applicant(s), expressed or implied whereby his compensation for services is to be dependent or contingent upon the favorable exercise of discretion in the granting of the application herein. (except: if any set forth details.)

5. That in the event there is any change in the matters set forth herein prior to the public hearing relating to the property affected hereby, deponent(s) will file with the Village a supplemental statement indicating the details of such change within 48 hours of such change.

I HAVE READ THE FOREGOING AND UNDERSTAND THAT ANY FALSE STATEMENT MADE THEREIN ARE PUNISHABLE AS A CLASS A MISDEMEANOR PURSUANT TO SECTION 210.45 OF THE PENAL LAW.

7/13/2020
Date

Applicant(s) Signature(s)

List of Names

Owners within 100' of Subject Property

Owner Name	Mailing Address	Town	State	Zip	Section	Block	Lot
CSP Property Holdings LLC	270 South Service Road, Suite 45	Melville	NY	11747	28	F	308
Best Real Estate Development LLC	97 Pine Hollow Road	Centre Island	NY	11771	28	58	11
Robert Hirschfield	431 Bay Ave	Centre Island	NY	11771	28	58	58,59
Charles Krypell	430 Bay Ave	Centre Island	NY	11771	28	58	60,61
Ina Romano	429 Bay Ave	Centre Island	NY	11771	28	58	9,62,63
Domenica Doar & Janet Dougherty	428 Bay Ave	Centre Island	NY	11771	28	58	64,65,66
William & Jo Ann Henry	425 Beach Ave	Centre Island	NY	11771	28	58	8
Michael Squire & Roseann Marrali	421 Centre Island Road	Centre Island	NY	11771	28	59	115,117
William Shephard	422 Centre Island Road	Centre Island	NY	11771	28	12	53,54

CONSENT OF ADJOINING OWNERS

(This page is not required and may be deleted)

We, the undersigned, property owners in the Village of _____ adjoining the property of Appellant(s) _____ herein described as Section _____ Block _____ Lot(s) _____, hereby approve(s) the granting of a variance by the Board of Zoning Appeals of said Village so as to permit the use, construction, or alteration of the building or structure or the use of the land sought by Appellant(s):

Name and Address of Person (Please Print)	**Signature**

Tongfang Han

41 Hilton Ave.

Garden City, NY 11530

July 14, 2020

Dear Incorporated Village of Centre Island,

Please be advised that I give my permission to Michael Aiello at Michael Aiello Construction Inc. to act as my Contract Vendee and to represent me in my application to the Board of Appeals for a Variance.

If you have any questions or concerns, please contact me at 516 210 5555 or 516 289 9999.

Thank you for your attention to this matter.

Sincerely,

Tongfang Han

Tongfang Han

3 copies
-colated

$300.00
3 000
es 900

Village of Centre Island

303 Centre Island Road
Oyster Bay NY, 11771
(516)922-0606

10/20/2017

Tang Fan Han
424 Centre Island Road.
Centre Island, NY, 11735

Re: **Application to build additions and alterations to existing dwelling..**

NCTM: Section **28**, Block **58**, Lot **10**, Zone **A-2**

Notice of Zoning Denial

Dear Applicant,
Your most recent application for a building permit has been DENIED for the following reason:

- Pursuant to Village of Centre Island Code, section 122-10.C, (1): The maximum permitted floor area for a dwelling with a lot area of 0.23 Acres within the A-2 zoning district is **2000 s.f.**

  *Proposed rear and side yard additions will result in a total floor area of **3100 sf** (1100 sf in excess of the maximum permitted floor area)*

Should you wish to pursue this application as submitted, a variance must be obtained from the Centre Island Board of Zoning Appeals. If you are successful in obtaining the required variance, you will then be required to submit to the Architectural Review Board for approval.

If you have any questions, please contact me at Village Hall or on my cell phone at (516) 659-0010.

Joseph E. Richardson, Building Inspector

BOARD OF ZONING APPEALS
VILLAGE OF CENTRE ISLAND
----------X

FILE NO. Z-2017-09

In the Matter of the Appeal of

TONGFANG HAN

----------X

MINUTES and
SHORT-FORM DECISION

Present:	Carter F. Bales, Chairman John Macaskill Russell Selover Gregg Haggerty
Absent:	Rita Hirschfield Anne Busquet, Alternate Barbara Tini, Alternate
Hearing Date:	December 9, 2017
Decision Date:	December 9, 2017
Property:	Section 28, Block 58, Lot 10 A-2 Zoning District
Petitioners' Status:	Owner

The Board of Zoning Appeals of the Incorporated Village of Centre Island, with the above Board members constituting a quorum of the Board, rendered its decision in the above appeal.

*****DECISION*****

The appeal of Tongfang Han, owner of a 0.23-acre parcel of land located at 424 Centre Island Road in the Village, designated as Section 28, Block 58, Lot 10 on the Nassau County Land and Tax Map and located within the Village's A-2 zoning district in which the Appellant seeks to construct one and two story additions to the northerly side of the existing dwelling which would result in a total floor area of 3,100 square feet rather than the maximum permitted 2,000 square feet be, and the same hereby is, **GRANTED**, subject to the following conditions:

1. The Appellants shall install drainage structures as required by the Building Inspector.

2. Prior to the issuance of a certificate of occupancy, the Appellant shall install landscape screen planting as may be required by the Architectural Review Board.

The Board rendered its decision after considering and weighing the factors of Section 7-712b of the Village Law.

Carter F. Bales

Carter F. Bales, Chairman

Votes for Grant:

Carter F. Bales, Chairman
John Macaskill
Russell Selover
Gregg Haggerty

Votes for Denial:

None

Not voting as not having heard the appeal:

Rita Hirschfield
Anne Busquet, Alternate
Barbara Tini, Alternate

Filed with me this 25 day of January, 2018

Carol Schmidlapp
Village Clerk

THIS APPROVAL EXPIRES ONE (1) YEAR FROM THE DATE OF FILING WITH THE VILLAGE CLERK, UNLESS FURTHER EXTENDED BY RESOLUTION OF THE BOARD OF ZONING APPEALS.

THE GRANTING OF THIS VARIANCE DOES NOT CONSTITUTE A BUILDING PERMIT. NO CONSTRUCTION MAY BE COMMENCED UNTIL A BUILDING PERMIT IS ISSUED BY THE BUILDING INSPECTOR. A GRANT OF A VARIANCE IS LIMITED TO THE MATTERS SPECIFIED HEREIN, AND DOES NOT RELIEVE THE OWNER FROM COMPLIANCE WITH OTHER STATUTES, ORDINANCES, REQUIREMENTS OR RULES WHICH MAY ALSO APPLY TO THE USE OR IMPROVEMENT OF THE SUBJECT PROPERTY.

THE CONSTRUCTION PERMITTED BY THE VARIANCE(S) GRANTED HEREIN MUST BE CONSTRUCTED IN STRICT CONFORMITY WITH THE SITE PLAN, ARCHITECTURAL DRAWINGS AND ANY OTHER MATERIALS SUBMITTED TO AND APPROVED BY THE BOARD OF ZONING APPEALS.

* * * *

ANY PERSON AGGRIEVED BY THE FOREGOING DECISION MAY, WITHIN 30 DAYS AFTER IT IS FILED WITH THE VILLAGE CLERK, SERVE A WRITTEN DEMAND UPON THE VILLAGE CLERK REQUESTING A WRITTEN DECISION SETTING FORTH THE FINDINGS WHICH FORMED THE BASIS FOR THE BOARD'S DETERMINATION.

617.20
Appendix B
Short Environmental Assessment Form

Instructions for Completing

Part 1 - Project Information. The applicant or project sponsor is responsible for the completion of Part 1. Responses become part of the application for approval or funding, are subject to public review, and may be subject to further verification. Complete Part 1 based on information currently available. If additional research or investigation would be needed to fully respond to any item, please answer as thoroughly as possible based on current information.

Complete all items in Part 1. You may also provide any additional information which you believe will be needed by or useful to the lead agency; attach additional pages as necessary to supplement any item.

Part 1 - Project and Sponsor Information

TONGFANG HAN

Name of Action or Project:
424 CENTRE ISLAND ROAD

Project Location (describe, and attach a location map):

Brief Description of Proposed Action:
ADDITION IN REAR OF HOUSE

Name of Applicant or Sponsor:	Telephone: (516)301-6015 / (516)289-9999
TONGFANG HAN (AMY)	E-Mail:

Address:
69 OSBORNE ROAD

City/PO:	State:	Zip Code:
GARDEN CITY	NY	11530

	NO	YES
1. Does the proposed action only involve the legislative adoption of a plan, local law, ordinance, administrative rule, or regulation? If Yes, attach a narrative description of the intent of the proposed action and the environmental resources that may be affected in the municipality and proceed to Part 2. If no, continue to question 2.	☑	☐
2. Does the proposed action require a permit, approval or funding from any other governmental Agency? If Yes, list agency(s) name and permit or approval:	☑	☐

3.a. Total acreage of the site of the proposed action? _____ acres 1410 SQ. FEET
b. Total acreage to be physically disturbed? _____ acres
c. Total acreage (project site and any contiguous properties) owned or controlled by the applicant or project sponsor? _____ acres 10,000. SQ. FT.

4. Check all land uses that occur on, adjoining and near the proposed action.
☐ Urban ☐ Rural (non-agriculture) ☐ Industrial ☐ Commercial ☑ Residential (suburban)
☐ Forest ☐ Agriculture ☐ Aquatic ☐ Other (specify): _____
☐ Parkland

RECEIVED
SEP 10 2020

RESET

	NO	YES	N/A
5. Is the proposed action, a. A permitted use under the zoning regulations?	☐	☐	☐
b. Consistent with the adopted comprehensive plan?	☐	☐	☐

	NO	YES
6. Is the proposed action consistent with the predominant character of the existing built or natural landscape?	☐	✓
7. Is the site of the proposed action located in, or does it adjoin, a state listed Critical Environmental Area? If Yes, identify: _____	✓	☐
8. a. Will the proposed action result in a substantial increase in traffic above present levels?	✓	☐
b. Are public transportation service(s) available at or near the site of the proposed action?	✓	☐
c. Are any pedestrian accommodations or bicycle routes available on or near site of the proposed action?	✓	☐
9. Does the proposed action meet or exceed the state energy code requirements? If the proposed action will exceed requirements, describe design features and technologies: WILL BE BROUGHT UP TO CURRENT ENERGY CODES	☐	✓
10. Will the proposed action connect to an existing public/private water supply? If No, describe method for providing potable water: _____	✓	☐
11. Will the proposed action connect to existing wastewater utilities? If No, describe method for providing wastewater treatment: _____	✓	☐
12. a. Does the site contain a structure that is listed on either the State or National Register of Historic Places?	✓	☐
b. Is the proposed action located in an archeological sensitive area?	✓	☐
13. a. Does any portion of the site of the proposed action, or lands adjoining the proposed action, contain wetlands or other waterbodies regulated by a federal, state or local agency?	✓	☐
b. Would the proposed action physically alter, or encroach into, any existing wetland or waterbody? If Yes, identify the wetland or waterbody and extent of alterations in square feet or acres: _____	✓	☐

14. Identify the typical habitat types that occur on, or are likely to be found on the project site. Check all that apply:
☐ Shoreline ☐ Forest ☐ Agricultural/grasslands ☐ Early mid-successional
☐ Wetland ☐ Urban ☐ Suburban

	NO	YES
15. Does the site of the proposed action contain any species of animal, or associated habitats, listed by the State or Federal government as threatened or endangered?	✓	☐
16. Is the project site located in the 100 year flood plain?	✓	☐
17. Will the proposed action create storm water discharge, either from point or non-point sources? If Yes, a. Will storm water discharges flow to adjacent properties? ☐ NO ☐ YES	✓	☐
b. Will storm water discharges be directed to established conveyance systems (runoff and storm drains)? If Yes, briefly describe: ☐ NO ☐ YES		

RESET

	NO	YES
18. Does the proposed action include construction or other activities that result in the impoundment of water or other liquids (e.g. retention pond, waste lagoon, dam)? If Yes, explain purpose and size:	☑	☐
19. Has the site of the proposed action or an adjoining property been the location of an active or closed solid waste management facility? If Yes, describe:	☑	☐
20. Has the site of the proposed action or an adjoining property been the subject of remediation (ongoing or completed) for hazardous waste? If Yes, describe:	☑	☐

I AFFIRM THAT THE INFORMATION PROVIDED ABOVE IS TRUE AND ACCURATE TO THE BEST OF MY KNOWLEDGE

Applicant/sponsor name: Tom Lassman Date: 7/13/2020

Signature:

Part 2 - Impact Assessment. The Lead Agency is responsible for the completion of Part 2. Answer all of the following questions in Part 2 using the information contained in Part 1 and other materials submitted by the project sponsor or otherwise available to the reviewer. When answering the questions the reviewer should be guided by the concept "Have my responses been reasonable considering the scale and context of the proposed action?"

	No, or small impact may occur	Moderate to large impact may occur
1. Will the proposed action create a material conflict with an adopted land use plan or zoning regulations?	☑	☐
2. Will the proposed action result in a change in the use or intensity of use of land?	☑	☐
3. Will the proposed action impair the character or quality of the existing community?	☑	☐
4. Will the proposed action have an impact on the environmental characteristics that caused the establishment of a Critical Environmental Area (CEA)?	☑	☐
5. Will the proposed action result in an adverse change in the existing level of traffic or affect existing infrastructure for mass transit, biking or walkway?	☑	☐
6. Will the proposed action cause an increase in the use of energy and it fails to incorporate reasonably available energy conservation or renewable energy opportunities?	☑	☐
7. Will the proposed action impact existing: a. public / private water supplies?	☑	☐
b. public / private wastewater treatment utilities?	☑	☐
8. Will the proposed action impair the character or quality of important historic, archaeological, architectural or aesthetic resources?	☑	☐
9. Will the proposed action result in an adverse change to natural resources (e.g., wetlands, waterbodies, groundwater, air quality, flora and fauna)?	☑	☐

RESET

	No, or small impact may occur	Moderate to large impact may occur
10. Will the proposed action result in an increase in the potential for erosion, flooding or drainage problems?	☑	☐
11. Will the proposed action create a hazard to environmental resources or human health?	☑	☐

Part 3 - Determination of significance. The Lead Agency is responsible for the completion of Part 3. For every question in Part 2 that was answered "moderate to large impact may occur", or if there is a need to explain why a particular element of the proposed action may or will not result in a significant adverse environmental impact, please complete Part 3. Part 3 should, in sufficient detail, identify the impact, including any measures or design elements that have been included by the project sponsor to avoid or reduce impacts. Part 3 should also explain how the lead agency determined that the impact may or will not be significant. Each potential impact should be assessed considering its setting, probability of occurring, duration, irreversibility, geographic scope and magnitude. Also consider the potential for short-term, long-term and cumulative impacts.

☐ Check this box if you have determined, based on the information and analysis above, and any supporting documentation, that the proposed action may result in one or more potentially large or significant adverse impacts and an environmental impact statement is required.

☑ Check this box if you have determined, based on the information and analysis above, and any supporting documentation, that the proposed action will not result in any significant adverse environmental impacts.

Name of Lead Agency	Date
Print or Type Name of Responsible Officer in Lead Agency	Title of Responsible Officer
Signature of Responsible Officer in Lead Agency	Signature of Preparer (if different from Responsible Officer)

PRINT

RESET

GENERAL CONDITIONS

UNLESS OTHERWISE NOTED, GENERAL CONDITIONS OF THE CONTRACT FOR CONSTRUCTION, AIA DOCUMENT-201 4/87 SHALL APPLY. THE CONTRACTOR SHALL OBTAIN CERTIFICATE OF OCCUPANCY. SUBSTITUTIONS SHOULD NOT BE MADE WITHOUT WRITTEN AUTHORIZATION BY THE ARCHITECT. THE PREMISES SHALL BE KEPT REASONABLY CLEAN AT ALL TIMES. AT THE COMPLETION OF WORK, THE CONTRACTOR SHALL REMOVE ALL WASTE MATERIALS, TOOLS, RUBBISH, ETC., CLEAN GLASS AND LEAVE WORK BROOM CLEAN UNLESS OTHERWISE SPECIFIED. THE CONTRACTOR SHALL CARRY WORKMAN'S COMPENSATION AND GENERAL LIABILITY INSURANCE. ALL SHALL COMPLY WITH STATE AND LOCAL CODES AND ORDINANCES. THE CONTRACTOR SHOULD FULLY GUARANTEE HIS WORK AND THE WORK OF HIS SUBCONTRACTORS FOR A PERIOD OF ONE YEAR AFTER COMPLETION OF THE PROJECT UNLESS OTHERWISE SPECIFIED. ALL WORK SHALL BE PERFORMED IN ACCORDANCE WITH GOOD BUILDING PRACTICES. THE CONTRACTOR SHALL INDEMNIFY AND HOLD HARMLESS THE OWNER, ARCHITECT, AND THEIR AGENTS AND EMPLOYEES FROM AND AGAINST ALL CLAIMS, DAMAGES, LOSES AND EXPENSES, INCLUDING ATTORNEYS FEES ARISING OUT OF OR RESULTING FROM THE PERFORMANCE OF THE WORK PROVIDED THAT ANY SUCH CLAIM, DAMAGE, LOSS OR EXPENSE (A) IS ATTRIBUTABLE TO BODILY INJURY, SICKNESS, DISEASE OR DEATH OR TO INJURY TO OR DESTRUCTION OF TANGIBLE PROPERTY (OTHER THAN THE WORK ITSELF INCLUDING THE LOSS OR USE RESULTING THERE FROM). (B) IS CAUSED IN WHOLE OR IN PART BY ANY NEGLIGENT ACT OR OMISSION OF THE CONTRACTOR, ANY SUBCONTRACTOR, ANYONE DIRECTLY OR INDIRECTLY EMPLOYED BY ANY OF THEM, OR ANYONE FOR WHOSE ACTS ANY OF THEM MAY BE LIABLE REGARDLESS OF WHETHER OR NOT IT IS CAUSED IN PART BY A PARTY INDEMNIFIED HEREUNDER. ALL MATERIALS, ASSEMBLIES, AND METHOD OF CONSTRUCTION INCLUDING BUT NOT LIMITED TO FORM-WORK, BLOCK-WORK, FRAMING, NAILING, PLACING OF CONCRETE, ETC. ARE TO BE CAREFULLY SUPERVISED BY THE CONTRACTOR TO BE SURE THEY ARE IN ACCORDANCE WITH THE DRAWINGS, SPECIFICATIONS, APPLICABLE CODES AND GOOD PRACTICE. DEVIATIONS FROM THE DRAWINGS AND SPECIFICATIONS WILL NOT BE PERMITTED WITHOUT WRITTEN AUTHORIZATION OF THE ARCHITECT. THE CONTRACTOR SHALL BE RESPONSIBLE FOR THE SHOP DRAWINGS WHICH MAY BE NEEDED. ALL DIMENSIONS AND CONDITIONS ARE TO BE FIELD VERIFIED. CONTRACTOR TO REMOVE & RELOCATE AS REQUIRED ALL EXISTING WORK WHICH INTERFERES WITH NEW CONSTRUCTION.

SITE WORK

STAKEOUT IS TO BE PERFORMED BY A LICENSED SURVEYOR. STAKING AND LAYOUT ARE TO ESTABLISH ALL LINES AND BENCHMARKS. VERIFY ALL GIVEN DATA ON DRAWINGS. IN CASE OF DISCREPANCY, RECEIVE CLARIFICATION FROM ARCHITECT PRIOR TO PROCEEDING. EXCAVATE AND BACK FILL FOR WORK INDICATED ON DRAWINGS. STOCKPILE TOPSOIL OBTAINED FROM STRIPPING DRIVEWAY AND BUILDING SITE. STOCKPILE ALL EXCAVATED MATERIAL. NEW AND EXISTING BACK FILL MATERIAL AND TOPSOIL ARE TO BE FREE OF WEEDS, TREE ROOTS, ROCKS AND DEBRIS. ALL SURPLUS MATERIAL THAT IS UNSUITABLE FOR BACK FILL MATERIAL SHALL BE REMOVED FROM THE SITE. PROTECT ALL TREES WITHIN EIGHT FEET OF THE BUILDING. PROPER APPROVALS MUST BE OBTAINED BEFORE COVERING ANY EXCAVATED WORK.

CONCRETE BLOCK

ALL CONCRETE BLOCK IS TO HAVE "DUR-O-WALL" REINFORCING EVERY THIRD COURSE. FILL TOP COURSE SOLID. MORTAR MIX TO BE ONE PART PORTLAND CEMENT, ONE PART LIME PUTTY, AND SIX PARTS SAND, OR ONE PART MASONRY CEMENT AND THREE PARTS SAND.

CONCRETE

NO CONCRETE OR MASONRY WORK SHALL BE DONE DURING TEMPERATURES OF 40 DEGREES F. AND FALLING. NO CONCRETE SHALL BE PLACED ON FROZEN SURFACES. NO ADDITIVES SHALL BE ALLOWED WITHOUT WRITTEN PERMISSION OF THE ARCHITECT ALL CONCRETE IS TO BE MIN. 3,500 P.S.I. AT 28 DAYS & 4,000 PSI FOR GARAGE SLAB. PROVIDE ALL SLEEVES AND FOUNDATION VENTS AS REQUIRED BY NYS CODE. UNLESS INDICATED, ALL FOUNDATION FOOTINGS ARE TO BE A MIN. 8" DEEP PROJECTING 6" ON EACH SIDE OF THE FOUNDATION WALL. PROVIDE TWO #4 DEFORMED BARS CONTINUOUS IN THE FOOTING. ALL 4" THICK CONCRETE SLABS TO HAVE 6X6 10/10 WELDED WIRE REINFORCING. ANCHOR BOLTS IN CONCRETE SHALL BE HOOKED 5/8" X 12" AT MAX. 3' O.C. PROVIDE BITUMEN EXPANSION JOINTS BETWEEN SLABS AND FOUNDATION WALLS.

FIREPLACE

FIREPLACE OPENING AND FLUE SIZE TO BE AS INDICATED ON DRAWINGS. PROVIDE OUTSIDE COMBUSTION AIR WITH 6" DUCT AND DAMPER EACH SIDE FOR A TOTAL RECOVERY CAPACITY OF 150 CFM MIN. MAINTAIN MAXIMUM 20 CFM INFILTRATION THROUGH THE FLUE WHEN NOT IN USE PROVIDE FIREPLACE OPENING WITH GLASS DOORS TO CONFORM TO THE 2015 IECC. FIREBOX TO BE COMPLETELY LINED WITH FIREBRICK. PROVIDE MIN. 8" FIREPLACE WALL THICKNESS WITH 4" NON COMBUSTIBLE FIRE STOPPING BETWEEN COMBUSTIBLE WOOD FRAME CONSTRUCTION.

FOUNDATION WATERPROOFING

INSTALL TWO LAYERS OF TOWELED ON FIBERGLASS MASTIC. (FED. SPEC. S.S.C. 153 TYPE-1) MEMBRANE TO BE CONTINUOUS FROM TOP OF FOUNDATION AND EXTEND TO LAP EDGE OF FOOTING.

FIRE BLOCKING

FIRE BLOCKING SHALL BE PROVIDED, AS PER SECTION R502.13 OF THE RESIDENTIAL CODE OF NEW YORK STATE, TO CUT OFF ALL CONCEALED DRAFT OPENINGS (BOTH VERTICAL AND HORIZONTAL).
PROVIDE FIRE BLOCKING IN CONCEALED SPACES OF STUD WALLS AND PARTITIONS, INCLUDING FURRED SPACES AT THE CEILING AND FLOOR LEVELS. CONCEALED HORIZONTAL FURRED SPACES SHALL ALSO BE FIRE BLOCKED AT INTERVALS NOT EXCEEDING 10 FEET.

PLUMBING

CONTRACTOR SHALL INSTALL WATER SUPPLY AND SANITARY SYSTEM AS INDICATED. PROVIDE HOT AND COLD SHUT-OFF VALVES AT ALL FIXTURES. ALL WATER PIPING TO HAVE CLEANOUTS AT ALL CHANGES OF DIRECTION AND AT BASE OF VERTICAL WASTES. USE 4" CAST IRON THROUGH FOUNDATION WALL PITCHED MIN. 1/8" PER FOOT. TRAP/WASTE SIZES FOR FIXTURES SHALL BE AS FOLLOWS:

DISH WASHER	1 1/2"
KITCHEN SINK	1 1/2"
LAVATORY	1 1/4"
SHOWER	2"
TOILET	3"

ALL SYSTEMS TO HAVE ONE 3" MAIN VENT STACK INCREASED TO 4" THROUGH THE ROOF. PROVIDE FROST PROOF HOSE-BIBS AS INDICATED ON PLANS WITH EASILY ACCESSIBLE DRAIN DRAIN-COCKS. THE WATER SUPPLY AND SEWAGE DISPOSAL SYSTEM SHALL COMPLY TO THE APPLICABLE COUNTY DEPARTMENT OF HEALTH STANDARDS AND REGULATIONS. APPROVAL OF ALL PLUMBING MUST BE OBTAINED FROM APPROPRIATE LOCAL AUTHORITIES PRIOR TO CONCEALMENT. PRIOR TO ORDERING, CONTRACTOR SHALL SUPPLY CUTS OF FIXTURES FOR OWNERS APPROVAL. IN THE EVENT THAT THE OWNER CHANGES, THE CONTRACTOR SHALL CREDIT THE OWNER FOR THE FULL SUBCONTRACTORS COST FOR THE CHANGED UNIT.

HVAC

SYSTEM TO BE DESIGNED BY OTHERS. PROVIDE PROPER SUPPLY TO ALL ROOMS & CONFORM WITH ALL STATE AND LOCAL CODES.

FRAMING AND ROUGH CARPENTRY

JOISTS RAFTERS AND STUDS SHALL BE CONSTRUCTION GRADE DOUGLAS FIR-SOUTH SELECT STRUCTURAL. ALL WOOD SILLS AND WOOD IN CONTACT WITH MASONRY SHALL BE ACQ. ALL EXTERIOR SHEATHING SHALL BE 1/2 CDX DOUGLAS FIR PLYWOOD. SUB-FLOORS TO BE 3/4" CDX PLYWOOD EXTERIOR SHEATHING TO BE COVERED WITH "TYVEK" HOUSE WRAP OR APPROVED EQUAL. BLOCK STUD WALLS AT 1/2 STORY HEIGHTS AND AT ALL UNSUPPORTED EDGES OF PLYWOOD. PROVIDE SOLID BLOCKING AND DIAGONAL BRACING OF FLOOR JOISTS AT 8' O.C. MAXIMUM AND SOLID BLOCKING UNDER ALL UNSUPPORTED EDGES OF PLYWOOD. ALL CAP PLATES TO BE DOUBLED AND NAILED BOTTOM CAP PLATED TO END OF STUDS. LAP CAP PLATES AT CORNERS. WHERE FLUSH FRAMING OCCURS, USE MIN. 16GA SHEET METAL JOIST HANGERS BY "TECO" OR APPROVED EQUAL. ALL CORNERS TO BE MINIMUM 3/2X4 STUDS. HEADERS SHALL BE MINIMUM 2/2X6 UNLESS NOTED ON PLANS. MINIMUM BEARING FOR STUDS, JOISTS AND BEAMS SHALL BE 3 1/2". USE DOUBLE JACK STUDS FOR HEADERS OVER FIVE FEET IN LENGTH.

NOTE: ALL NON-ENGINEERED LUMBER TO BE DOUGLAS FIR #2 OR BETTER

ASPHALT ROOF SHINGLES

INSTALLED AS PER SECTION R905.2 OF THE INTERNATIONAL RESIDENTIAL CODE ALL SLOPED ROOF SHINGLES SHALL BE GAF-CLASS-A ASPHALT ROOF SHINGLES OR APPROVED EQUAL. SHINGLES SHALL BE APPLIED OVER 15# ASPHALT FELT WITH GAF-WEATHER-WATCH ICE AND WATER BARRIER APPLIES AT EAVES, VALLEYS AND FLASHING. ROOFING CONTRACTOR TO PROVIDE ALL FLASHING NECESSARY FOR A WATERTIGHT, WEATHERPROOF JOB. ROOFING IS TO BE APPLIED IN STRICT ACCORDANCE WITH THE MANUFACTURES SPECIFICATIONS. CONTRACTOR SHALL SUPPLY COLOR SAMPLES OF THE SHINGLES FOR OWNER'S APPROVAL, PRIOR TO INSTALLATION.

INSULATION

ALL EXTERIOR WALLS AND ROOFS SHALL BE INSULATED WITH FOIL FACED FIBERGLASS BATT INSULATION BY JOHN MANVILLE OR APPROVED EQUAL, FOIL TO BE PLACED TOWARD WARM SIDE. PROVIDE 11/2" RIGID FOAM INSULATION ON ALL EXTERIOR FOUNDATION WALLS FROM FOOTING TO 6"BELOW FINISHED GRADE UNLESS OTHERWISE SPECIFIED. CARE SHOULD BE TAKEN NOT TO DAMAGE FOUNDATION WATERPROOFING.

GLASS WINDOWS AND DOORS

TO BE INSTALLED AS PER SECTION R308 OF THE RESIDENTIAL CODE OF N.Y.S. ALL GLASS IS TO BE INSULATED LOW-E UNLESS OTHERWISE SPECIFIED. GLASS SUBCONTRACTOR SHALL NOT INSTALL GLASS UNTIL PROPER CLEARANCES ARE PROVIDED. ALL SLIDING GLASS DOORS, SKYLIGHTS AND/OR WINDOWS AS REQUIRED BY CODE, SHALL BE INSULATED TEMPERED GLASS. ALL GLASS DOORS AND WINDOWS SHALL BE INSTALLED IN STRICT ACCORDANCE WITH THE MANUFACTURES SPECIFICATIONS. ALL WINDOWS ARE TO BE CAULKED AND SEALED AS PER 2015 IECC REQUIREMENTS. PROVIDE FLASHING PANS UNDER ALL SLIDER, DOORS, AND WINDOWS WITHIN A 6" OF AN EXTERIOR SURFACE. ALL EXTERIOR DOORS ARE TO BE FULLY WEATHER-STRIPPED. PROVIDE ALL SCREENS AND HARDWARE AS REQUIRED. ALL GLASS IS TO BE FREE OF SCRATCHES AND IMPERFECTIONS AND GUARANTEED BY THE MANUFACTURER FOR A PERIOD OF NO LESS THAN 5 YEARS. ALL WINDOWS TO BE ANDERSEN UNLESS INDICATED OTHERWISE.

PAINTING AND STAINING

THE FOLLOWING IS INCLUDED FOR THE CONVENIENCE OF THE PAINTING CONTRACTORS AND ONLY AS AN INDICATION OF THE TYPES OF PAINTS REQUIRED FOR VARIOUS SURFACES. IT IS THE INTENT OF THESE SPECIFICATIONS TO PROVIDE A COMPLETE FINISH. ALL PAINTED SURFACES MUST BE FULLY COVERED IN A UNIFORM MANNER TO BE ACCEPTABLE.
INTERIOR WOOD SURFACES-APPLY TO LIGHTLY SANDED SURFACES, WALLS, DOORS, FRAMES, TRIM, AND BASES, ONE COAT WOOD FILLER OR STAIN AND TWO COATS MCKLUSKY'S EGGSHELL FINISH NON-YELLOWING POLYURETHANE.
GYPSUM BOARD- MINIMUM ONE COAT PRIMER AND TWO COATS FLAT PAINT.
EXTERIOR WOOD SURFACES- TWO COATS EXTERIOR GRADE STAIN.
EXTERIOR EXPOSED METAL- MINIMUM ONE COAT ZINC CHROMATE AND TWO COATS EXTERIOR ENAMEL.
ALL MATERIAL SHALL BE OF BEST QUALITY PITTSBURGH, PRATT & LAMBERT, DUTCH BOY. CABOTS, MCKLUSKYS, OR APPROVED EQUAL. CONTRACTOR IS TO PROVIDE SAMPLES OF ALL PAINTS AND STAINS FOR ARCHITECT'S AND/OR OWNERS APPROVAL.

GYPSUM WALL BOARD

INSTALLED AS PER SECTION R702.3.2. THROUGH R702.3.6 OF THE INTERNATIONAL RESIDENTIAL CODE. GYPSUM WALLBOARD APPLICATION SHALL BE TAPE JOINT SYSTEM. ALL GYPSUM BOARD TO BE 1/2" ON WALLS AND 1/2" ON CEILINGS UNLESS OTHERWISE INDICATED. FINISH JOINTS, J-BEADS. NAIL DIMPLES, CORNERS AND EDGES SHALL BE TAPED AND RECEIVE THREE COATS OF JOINT COMPOUND. ALLOW 24 HOURS TO DRY BETWEEN COATS. FINAL COAT TO BE SANDED SMOOTH. METAL CORNER BEAD TO BE USED ON ALL OUTSIDE CORNERS AND AROUND ALL OPENINGS.

ELECTRICAL

ALL WORK SHALL COMPLY WITH THE NATIONAL ELECTRICAL CODE AND ALL STATE, LOCAL, AND UTILITY COMPANY CODES AND REGULATIONS. ALL CIRCUITS SHALL BE MINIMUM 15 AMP. POWER WIRING SHALL BE MINIMUM 14 AWG. CONVENIENCE OUTLETS SHALL BE LOCATED 12" ABOVE FINISHED FLOOR UNLESS OTHERWISE INDICATED. ALL SWITCHED TO BE LOCATED 36" ABOVE THE FINISHED FLOOR UNLESS OTHERWISE INDICATED. SUPPLY RECOMMENDED LAMPS IN ALL FIXTURES.

2015 IECC -AIR LEAKAGE:

-JOINTS, PENETRATIONS, AND ALL OTHER SUCH OPENINGS IN THE BUILDINGS ENVELOPE THAT ARE SOURCES OF AIR LEAKAGE MUST BE SEALED.
-RECESSED LIGHTS MUST BE TYPE IC RATED AND INSTALLED WITH NO PENETRATIONS, OR TYPE IC OR NON-IC RATED INSTALLED INSIDE AN APPROPRIATE AIR-TIGHT ASSEMBLY WITH 0.5" CLEARANCE FROM COMBUSTIBLE MATERIALS AND 3" CLEARANCE FROM INSULATION

VAPOR RETARDER:
-REQUIRED ON THE WARM-IN-WINTER SIDE OF ALL NON-VENTED FRAMED CEILINGS, WALLS, AND FLOORS.

MATERIALS IDENTIFICATION:
-MATERIALS AND EQUIPMENT MUST BE INSTALLED IN ACCORDANCE WITH THE MANUFACTURER'S INSTALLATION INSTRUCTIONS.
-MATERIALS AND EQUIPMENT MUST IDENTIFIED SO THAT THE COMPLIANCE CAN BE DETERMINED.
-MANUFACTURER MANUALS FOR ALL INSTALLED HEATING AND COOLING EQUIPMENT AND SERVICE WATER HEATING EQUIPMENT MUST BE PROVIDED.
-INSULATION R-VALUES AND GLAZING U-FACTORS MUST BE CLEARLY MARKED ON THE BUILDING PLANS OR SPECIFICATIONS.

DUCT INSULATION:
-SUPPLY DUCTS IN UNCONDITIONED ATTICS OR OUTSIDE THE BUILDING MUST BE INSULATED TO R-8.
-RETURN DUCTS IN UNCONDITIONED ATTICS OR OUTSIDE THE BUILDING MUST BE INSULATED TO R-4.
-SUPPLY DUCTS IN UNCONDITIONED SPACES MUST BE INSULATED TO R-8.
-RETURN DUCTS IN UNCONDITIONED SPACES (EXCEPT BASEMENTS) MUST BE INSULATED TO R-2.
-INSULATION IS NOT REQUIRED ON RETURN DUCTS IN BASEMENTS.

DUCT CONSTRUCTION:
-ALL JOINTS, SEAMS, AND CONNECTIONS MUST BE SECURELY FASTENED WITH WELDS, GASKETS, MASTICS (ADHESIVES), MASTIC-PLUS-EMBEDDED-FABRIC, OR TAPES. DUCT TAPE IS NOT PERMITTED.
EXCEPTION: CONTINUOUSLY WELDED AND LOCKING-TYPE LONGITUDINAL JOINTS AND SEAMS ON DUCTS OPERATING AT LESS THAN 2" w.g. (500 PA.)
-DUCTS SHALL BE SUPPORTED EVERY 10 FEET OR IN ACCORDANCE WITH THE MANUFACTURER'S INSTRUCTIONS.
-COOLING DUCTS WITH EXTERIOR INSULATION MUST BE COVERED WITH A VAPOR RETARDER.
-AIR FILTERS ARE REQUIRED IN THE RETURN AIR SYSTEM.
-THE HVAC SYSTEM MUST PROVIDE A MEANS FOR BALANCING AIR AND WATER SYSTEMS.

TEMPERATURE CONTROLS:
-EACH DWELLING UNIT HAS AT LEAST ONE THERMOSTAT CAPABLE OF AUTOMATICALLY ADJUSTING THE SPACE TEMPERATURE SET POINT OF THE LARGEST ZONE.

ELECTRIC SYSTEMS:
-SEPARATE ELECTRIC METERS ARE REQUIRED FOR EACH DWELLING UNIT.

FIREPLACES:
-FIREPLACES MUST BE INSTALLED WITH TIGHT FITTING NON-COMBUSTABLE FIREPLACE DOORS
-FIREPLACES MUST BE PROVIDED WITH A SOURCE OR COMBUSTION AIR, AS REQUIRED BY THE FIREPLACE CONSTRUCTION PROVISIONS OF THE BUILDING CODE OF NEW YORK STATE, THE RESIDENTIAL CODE OF NEW YORK STATE OR THE NEW YORK CITY BUILDING CODE, AS APPLICABLE.

SERVICE WATER HEATING:
-WATER HEATERS WITH VERTICAL PIPE RISERS MUST HAVE A HEAT TRAP ON BOTH THE INLET AND THE OUTLET UNLESS THE WATER HEATER HAS AN INTEGRAL HEAT TRAP OR IS PART OF A CIRCULATING SYSTEM.
-INSULATE CIRCULATING HOT WATER PIPES TO THE LEVELS ON TABLE 1.

CIRCULATING HOT WATER SYSTEMS:
-INSULATE CIRCULATING HOT WATER PIPES TO THE LEVELS ON TABLE 1.

HEATING AND COOLING PIPING INSULATION:
-HVAC PIPING CONVEYING FLUIDS ABOVE 105°F OR CHILLED FLUIDS BELOW 55°F MUST BE INSULATED TO THE LEVELS IN TABLE 2.

NOTES:

1. OBTAIN ALL PERMITS PRIOR TO THE START OF WORK.

2. ALL BEDROOM TO BE PROVIDED WITH ROD & SHELF, ALL LINEN CLOSETS TO BE PROVIDED WITH 5 ROWS OF SHELVES.

3. DOOR TRIM AND BASE MOLDING TO BE SELECTED

4. ALL BATHROOM FIXTURES AND FAUCETS TO BE SUPPLIED BY OWNER AND INSTALLED BY CONTRACTOR

5. FINISHES TO BE SUPPLIED BY OWNER

MINIMUM DESIGN DEAD LOADS* AS PER ASCE 7-05

COMPONENT	LOAD (psf)	
CEILINGS		
GYPSUM BOARD (1/2-in.)	7.0	
GYPSUM BOARD (5/8-in.)	9.0	
SUSPENDED STEEL CHANNEL SYSTEM	2.0	
COVERINGS, ROOF, AND WALL		
ASPHALT SHINGLES	2.0	
GYPSUM SHEATHING, 1/2-in.	2.0	
PLYWOOD (per 1/2-in.)	1.6	
RIGID INSULATION, 1/2-in.	0.75	
SINGLE-PLY SHEET WATERPROOFING MEMBRANE	0.7	
BITUMINOUS, SMOOTH SURFACE WATERPROOFING MEMBRANE	1.5	
FLOORS AND FLOOR FINISHES		
CERAMIC OR QUARRY TILE (3/4-in.) ON 1/2-in. MORTAR BED	16.0	
HARDWOOD FLOORING, 7/7-in.	4.0	
LINOLEUM OR ASPHALT TILE, 1/4-in.	1.0	
SUBFLOORING, 3/4-in.	3.0	
FLOORS, WOOD JOIST (no plaster) JOIST SIZES (in.)	12-in. O.C.	16-in. O.C.
2x6	6	5
2x8	6	6
2x10	7	6
2x12	8	7
FRAME PARTITIONS		
WOOD OR STEEL STUDS, 1/2-in. GYP. BOTH SIDES	8.0	
FRAME WALLS		
EXTERIOR STUD WALLS:		
2x4 @ 16-in., 5/8-in. GYPSUM, INSULATED, 3/8-in. SIDING	11.0	
2x6 @ 16-in., 5/8-in. GYPSUM, INSULATED, 3/8-in. SIDING	12.0	
EXTERIOR STUD WALLS WITH BRICK VENEER	48.0	

* WEIGHTS OF MASONRY INCLUDE MORTAR BUT NOT PLASTER. FOR PLASTER, ADD 5 ib/ft^2 FOR EACH FACE PLASTERED. VALUES GIVEN REPRESENT AVERAGES. IN SOME CASES THERE IS A CONSIDERABLE RANGE OF WEIGHT FOR THE SAME CONSTRUCTION.

2016 ECC OF NEW YORK STATE:

R401.3: PERMANENT CERTIFICATE - SHALL BE COMPLETED BY THE BUILDER OR REGISTERED DESIGN PROFESSIONAL AND POSTED IN THE UTILITY ROOM OR OTHER APPROVED LOCATION INSIDE THE BUILDING.

R402.2.4: ATTIC OR CRAWL SPACE ACCESS - SHALL BE WEATHER-STRIPPED AND INSULATED TO A LEVEL EQUIVALENT TO THE INSULATION ON THE SURROUNDING SURFACES.

R402.4: AIR LEAKAGE - BUILDING THERMAL ENVELOPE SHALL BE CONSTRUCTED TO LIMIT AIR LEAKAGE TO ≤ 3 AIR CHANGES PER HOUR.

R402.4.1.1: INSTALLATION - THE COMPONENTS OF THE BUILDING THERMAL ENVELOPE SHALL BE INSTALLED IN ACCORDANCE WITH THE CRITERIA LISTED IN TABLE 402.4.1.1. WHERE REQUIRED BY CODE OFFICIAL, AN APPROVED THIRD PARTY SHALL INSPECT ALL COMPONENTS AND VERIFY COMPLIANCE.

R402.4.1.2: TESTING - BUILDING OR DWELLING UNIT SHALL BE TESTED AND VERIFIED AS HAVING ≤ 3 ACH50 IN CZ4A, 5, A6A. TESTING SHALL BE CONDUCTED BY AN APPROVED THIRD PARTY.

R402.4.4: COMBUSTION CLOSETS - ROOMS CONTAINING FUEL-BURNING APPLIANCES REQUIRE SPECIAL CARE.
EXCEPTION: DIRECT VENT APPLIANCES WITH BOTH INTAKE AND EXHAUST PIPES INSTALLED CONTINUOUS TO THE OUTSIDE

R403.3.2: DUCT SEALING - DUCTS, AIR HANDLERS, AND FILTER BOXES SHALL BE SEALED.

R403.3.3: DUCT TESTING - DUCTS SHALL BE PRESSURE TESTED TO DETERMINE AIR LEAKAGE.
EXCEPTION: DUCT LEAKAGE TEST IS NOT REQUIRED WHERE THE DUCTS AND AIR HANDLERS ARE LOCATED ENTIRELY WITHIN THE BUILDING THERMAL ENVELOPE.

R403.3.5: BUILDING CAVITIES - SHALL NOT BE USED AS DUCTS OR PLENUMS

R403.4: MECHANICAL SYSTEM PIPING INSULATION - CARRYING FLUIDS >105°F OR <55°F, INSULATE TO R-3 MIN.

R403.6: MECHANICAL VENTILATION - THE BUILDING SHALL BE PROVIDED WITH VENTILATION THAT MEETS THE REQUIREMENTS OF IRC/IMC.
THE MECHANICAL VENTILATION RATE SHALL BE NO GREATER THAN
0.01 X CFA + 7.5 X (# OF BEDROOMS + 1)
*CFA = CONDITIONED FLOOR AREA

R403.7: EQUIPMENT SIZING - PER ACCA MANUEL S, BASED ON LOADS CALCULATED PER ACCA MANUEL J.

R404.1: LIGHTING - A MINIMUM OF 75% OF PERMANENTLY INSTALLED FIXTURES MUST HAVE HIGH-EFFICANCY LAMPS.
LOW-VOLTAGE LIGHTING EXEMPT

THIS PROJECT COMPLIES WITH THE 2015 INTERNATIONAL RESIDENTIAL CODE, 2ND PRINT, AS ADOPTED BY NEW YORK STATE, AND THE 2017 NEW YORK STATE SUPPLEMENT

IN ACCORDANCE WITH 2015 IECC RESIDENTIAL ENERGY EFFICIENCY CODE, THE PROJECT COMPLIANCE METHOD CHOSEN IS TOTAL UA-ALTERNATIVE AND A RESCHECK HAS BEEN SUBMITTED WITH THESE DRAWINGS.

TO THE BEST OF MY KNOWLEDGE, BELIEF AND PROFESSIONAL JUDGEMENT, THESE PLANS AND/OR SPECIFICATIONS ARE IN COMPLIANCE W/ THE 2015 IECC, 2ND PRINTING AS ADOPTED BY NYS, AND THE 2016 NYS ENERGY CODE SUPPLEMENT

THIS PROJECT COMPLIES WITH THE INTERNATIONAL MECHANICAL CODE, CHAPTER 12 THROUGH 24, THE INTERNATIONAL PLUMBING CODE, CHAPTER 25 THROUGH 32, THE INTERNATIONAL ELECTRIC CODE, CHAPTER 33 THROUGH 42.

TABLE R402.4.1.1 - AIR BARRIER AND INSULATION INTALLATION

COMPONENT	AIR BARRIER CRITERIA	INSULATION CRITERIA
CEILING / ATTIC	ALIGNED WITH INSULATION	ALIGNED WITH AIR BARRIER
WALLS	JUNCTION OF FOUNDATION AND SILL PLATE TO BE SEALED. JUNCTION OF TOP PLATE AND EXTERIOR WALLS TO BE SEALED	CAVITIES WITHIN CORNERS AND HEADERS OF FRAME WALLS SHALL BE FULLY INSULATED WITH MATERIAL HAVING MIN. R-3 PER INCH
RIM JOIST	RIM JOIST SHALL INCLUDE THE AIR BARRIER	RIM JOIST SHALL BE INSULATED
FLOORS (INCLUDING ABOVE GARAGES & CANTILEVERD FLOORS)	AIR BARRIER INSTALLED AT ANY EXPOSED EDGE OF INSULATION	MAINTAIN PERMANENT CONTACT WITH THE UNDERSIDE OF SUBFLOOR
CRAWL SPACE WALLS (APPLIES ONLY TO UNVENTED CRAWL SPACE)	EXPOSED EARTH IN UNVENTED CRAWL SPACES TO BE COVERED WITH A CLASS I VAPOR RETARDER	INSULATION SHALL BE PERMANENTLY ATTACHED TO CRAWL SPACE WALLS. IF NOT PROVIDED IN FLOOR
SHAFTS / PENETRATIONS	DUCT SHAFTS, UTILITY PENETRATIONS, AND FLUE SHAFTS OPENING TO UNCONDITIONED SPACE TO BE SEALED	
GARAGE SEPARATION	AIR SEAL BETWEEN GARAGE AND CONDITIONED SPACE	
RECESSED LIGHTING	SEALED TO THE DRYWALL	AIR TIGHT AND IC RATED
HVAC REGISTER BOOTS	REGISTER BOOTS THAT PENETRATE THERMAL ENVELOPE TO BE SEALED TO SUBFLOOR OR DRYWALL	

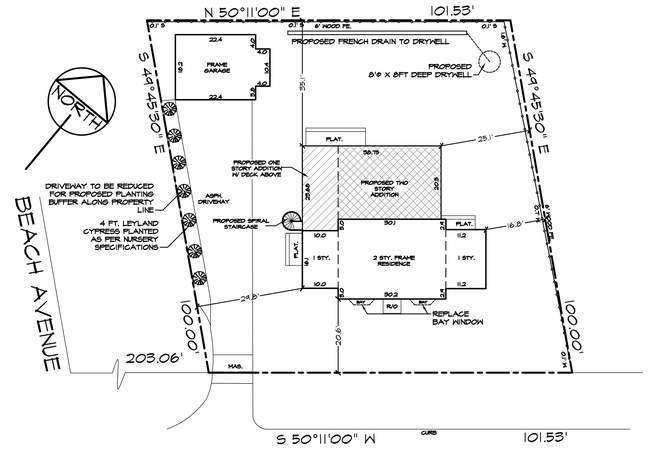

PLOT PLAN

SCALE: 1" = 20'-0"

ZONING INFORMATION

VILLAGE OF CENTRE ISLAND

SECTION: 28 BLOCK: 58 LOT(S): 10

ZONE: A-2 RES	REQUIRED	EXISTING	PROPOSED
LOT AREA	21,780 SQ.FT.	10,000 SQ.FT.	10,000 SQ.FT.
FRONTAGE	100.0 FT.	101.53 FT.	101.53 FT.
FRONT YARD	40 FT.	20.6 FT.	20.6 FT.
REAR YARD	25 FT.	55.7 FT.	35.1 FT.
SIDE YARD (MIN)	25 FT.	16.8 FT.	16.8 FT.
SIDE YARD (MIN)	25 FT.	29.8 FT.	29.8 FT.
BUILDING HEIGHT	32 FT.	30.6 FT.	30.6 FT.
LOT COVERAGE	30 %	14.7 %	22.94 %

F.A.R. CALCULATION

ZONE: A-2 RES		SQ. FOOTAGE
LOT AREA		10,000
1ST FLOOR		
	EXISTING	1,020
	PROPOSED	820
	TOTAL	1,840
2ND FLOOR		
	EXISTING	670
	PROPOSED	590
	TOTAL	1,260
	TOTAL	3,100
EXISTING DETACHED GARAGE		450
EXISTING FRONT R/O		20

MAXIMUM FLOOR AREA = 2,000

10,000 X 0.184 = 1,840 SF BUT NOT LESS THAN 2,000 SF

NOTE:
FOUNDATIONS CHAPTER 4 DESIGN BASED UPON PRESUMPTIVE LOAD BEARING VALUES OF SANDY GRAVEL AND/OR GRAVEL AT 2000 LBS PER SQUARE FOOT. CONTRACTOR TO CONSULT ENGINEER IF DIFFERENT SOIL MATERIALS ARE FOUND UPON EXCAVATION OR TEST HOLE, FOR ALTERNATIVE FOOTING AND FOUNDATION WALL DESIGN

TABLE 1: MINIMUM INSULATION THICKNESS FOR CIRCULATING HOT WATER PIPES
INSULATION THICKNESS IN INCHES BY PIPE SIZES

HEATED WATER TEMPERATURE (F)	NON-CIRCULATING RUNOUTS		CIRCULATING MAINS AND RUNOUTS	
	UP TO 1"	UP TO 1.25"	1.5" TO 2.0"	OVER 2"
170-180	0.5	1.0	1.5	2.0
140-160	0.5	0.5	1.0	1.5
100-130	0.5	0.5	0.5	1.0

TABLE 2: MINIMUM INSULATION THICKNESS FOR HVAC PIPES

PIPING SYSTEM TYPES	FLUID TEMP. RANGE (F)	INSULATION THICKNESS IN INCHES BY PIPE SIZE			
		2" RUNOUTS	1" AND LESS	1.25" TO 2"	2.5" TO 4"
HEATING SYSTEMS					
LOW PRESSURE/TEMPERATURE	201-250	1.0	1.5	1.5	2.0
LOW TEMPERATURE	120-200	0.5	1.0	1.0	1.5
STEAM CONDENSATE (FEED WATER)	ANY	1.0	1.0	1.5	2.0
COOLING SYSTEMS					
CHILLED WATER, REFRIGERANT	201-250	1.0	1.5	1.5	2.0
AND BRINE	120-200	0.5	1.0	1.0	1.5

CLIMATIC AND GEOGRAPHIC DESIGN CRITERIA
TABLE R301.2(1) INTERNATIONAL RESIDENTIAL CODE

GROUND SNOW LOAD	WIND DESIGN				SEISMIC DESIGN CATEGORY [f]	SUBJECT TO DAMAGE FROM			WINTER DESIGN TEMP [e]	ICE BARRIER REQUIRED [h]	FLOOD HAZARDS [g]	AIR FREEZING INDEX [i]	MEAN ANNUAL TEMP [j]
	SPEED [d] (MPH)	TOPOGRAPHIC EFFECTS [k]	SPECIAL WIND REGION [l]	WIND BORN DEBRIS ZONE [m]		WEATHERING [a]	FROST LINE DEPTH [b]	TERMITE [c]					
25	130vult	NO	NO	1 MILE FROM COAST	B	SEVERE	BOF 3 FT BFG	MOD TO HEAVY	SEE BELOW	YES	NONE	599	51

TOC ARCHITECTS
TODD O'CONNELL ARCHITECT P.C.
TODD O'CONNELL, AIA
1200 Veterans Memorial Highway
Suite 120
Hauppauge, NY 11788
P (631) 650-6666
F (631) 650-6667
C (516) 658-0325
www.tocarchitects.com
todd@tocarchitects.com

CONSULTANTS:

NYS LIC #027935

DRAWN BY: JGZ

CHECKED BY: TOC

REV #.	DATE:	NOTE:	BY:

PROPOSED ADDITION
LI RESIDENCE
424 LOCUST AVENUE
CENTRE ISLAND, NY 11530

DRAWING:

JOB#: LI-17-293
DATE: 02.24.20
SCALE: AS NOTED

DRAWING NUMBER
A.1

TABLE R602.3(1)
FASTENING SCHEDULE

ITEM	DESCRIPTION OF BUILDING ELEMENTS	NUMBER AND TYPE OF FASTENER ^{a,b,c}	SPACING AND LOCATION
		ROOF	
1	BLOCKING BETWEEN CEILING JOISTS OR RAFTERS TO TOP PLATE	4-8d BOX (2 ½"X0.113") OR 3-8d COMMON (2 ½"X0.131"); OR 3-10d BOX (2 ½"X0.128"); OR 3-3"X0.131" NAILS	TOE NAIL
2	CEILING JOISTS TO TOP PLATE	4-8d BOX (2 ½"X0.113") OR 3-8d COMMON (2 ½"X0.131"); OR 3-10d BOX (2 ½"X0.128"); OR 3-3"X0.131" NAILS	PER JOIST, TOE NAIL
3	CEILING JOIST NOT ATTACHED TO PARALLEL RAFTER, LAPS OVER PARTITIONS [see Sections R802.3.1 , R802.3.2 and Table R802.5.1 (9)]	4-10d BOX (3"X0.113") OR 3-16d COMMON (3 ½"X0.162"); OR 4-3"X0.131" NAILS	FACE NAIL
4	CEILING JOIST ATTACHED TO PARALLEL RAFTER (HEEL JOINT), [see Sections R802.3.1 , R802.3.2 and Table R802.5.1 (9)]	TABLE R802.5.1(9)	FACE NAIL
5	COLLAR TIE TO RAFTER, FACE NAIL OR 1 ¼" X 20ga. RIDGE STRAP TO RAFTER	4-10d BOX (3"X0.128") OR 3-10d COMMON (3 ½"X0.148"); OR 4-3"X0.131" NAILS	FACE NAIL EACH RAFTER
6	RAFTER OR ROOF TRUSS TO PLATE	3-16d BOX NAILS (3 ½"X0.135") OR 3-10d COMMON NAILS (3"X0.148"); OR 4-10d BOX (3"X0.128"); OR 4-3"X0.131" NAILS	2 TOE NAILS ON ONE SIDE AND 1 TOE NAIL ON OPPOSITE SIDE OF EACH RAFTER OR TRUSS i
7	ROOF RAFTERS TO RIDGE, VALLEY OR HIP RAFTERS OR ROOF RAFTERS TO MINIMUM 2" RIDGE BEAM	4-16d (3 ½"X0.135") OR 3-10d COMMON (3"X0.148"); OR 4-10d BOX (3"X0.128"); OR 4-3"X0.131" NAILS	TOE NAIL
		3-16d BOX (3 ½"X0.135") OR 2-16d COMMON (3 ½"X0.162"); OR 3-10d BOX (3"X0.128"); OR 3-3"X0.131" NAILS	TOE NAIL
		WALL	
8	STUD TO STUD (NOT AT BRACED WALL PANELS)	16d COMMON (3 ½"X0.162")	24" O.C. FACE NAIL
		10d (3"X0.128"); OR 3"X0.131") NAILS	16" O.C. FACE NAIL
9	STUD TO STUD AND ABUTTING STUDS AT INTERSECTING WALL CORNERS (AT BRACED WALL PANELS)	16d BOX (3 ½"X0.135"); OR 3"X0.131" NAILS	12" O.C. FACE NAIL
		16d COMMON (3 ½"X0.162")	16" O.C. FACE NAIL
10	BUILT-UP HEADER (2" TO 2" HEADER WITH ½" SPACER)	16d COMMON (3 ½"X0.162")	16" O.C. EACH EDGE FACE NAIL
		16d BOX (3 ½"X0.135")	12" O.C. EACH EDGE FACE NAIL
11	CONTINUOUS HEADER TO STUD	5-8d BOX (2 ½"X0.113"); OR 4-8d COMMON (2 ½"X0.131"); OR 4-10d BOX (3"X0.128"	TOE NAIL
12	TOP PLATE TO TOP PLATE	16d COMMON (3 ½"X0.162")	16" O.C. FACE NAIL
		10d BOX (3"X0.128"); OR 3"X0.131") NAILS	12" O.C. FACE NAIL
13	DOUBLE TOP PLATE SPLICE FOR SDC's A-D_2 WITH SEISMIC BRACED WALL LINE SPACING < 25'	8-16d COMMON (3 ½"X0.162"); OR 12-16d BOX (3 ½"X0.135"); OR 12-10d BOX (3"X0.128"); OR 12-3"X0.131" NAILS	FACE NAIL ON EACH SIDE OF END JOINT (MINIMUM 24" LAP SPLICE LENGTH EACH SIDE OF END JOINT)
	DOUBLE TOP PLATE SPLICE SDC's D_0, D_1 , OR D_2; AND BRACED WALL LINE SPACING ≥ 25'	12-16d (3 ½"X0.135")	
14	BOTTOM PLATE TO JOINT, RIM JOIST, BAND JOIST OR BLOCKING (NOT AT BRACED WALL PANELS)	16d COMMON (3 ½"X0.162")	16" O.C. FACE NAIL
		16d BOX (3 ½"X0.135"); OR 3"X0.131") NAILS	12" O.C. FACE NAIL
15	BOTTOM PLATE TO JOINT, RIM JOIST, BAND JOIST OR BLOCKING (AT BRACED WALL PANELS)	3-16d BOX (3 ½"X0.135"); OR 2-16d COMMON (3 ½"X0.162"); OR 4-3"X0.131" NAILS	3 EACH 16" O.C. FACE NAIL 2 EACH 16" O.C. FACE NAIL 4 EACH 16" O.C. FACE NAIL
16	TOP OR BOTTOM PLATE TO STUD	4-8d BOX (2 ½"X0.113"); OR 3-16d BOX (3 ½"X0.135"); OR 4-8d COMMON (2 ½"X0.131"); OR 4-10d BOX (3"X0.128"); OR 4-3" X 0.131 NAILS	TOE NAIL
		3-16d BOX (3 ½"X0.135"); OR 2-16d COMMON (3 ½"X0.162"); OR 3-10d BOX (3"X0.128"); OR 3-3"X0.131" NAILS	END NAIL
17	TOP PLATES, LAPS AT CORNERS AND INTERSECTIONS	3-10d BOX (3"X0.128"); OR 2-16d COMMON (3 ½"X0.162"); OR 3-3"X0.131" NAILS	FACE NAIL
18	1" BRACE TO EACH STUD AND PLATE	3-8d BOX (2 ½"X0.113"); OR 2-8d COMMON (2 ½"X0.131"); OR 2-10d BOX (3"X0.128"); OR 2 STAPLES 1 ¾"	FACE NAIL
19	1" X 6" SHEATHING TO EACH BEARING	3-8d BOX (2 ½"X0.113"); OR 2-8d COMMON (2 ½"X0.131"); OR 2-10d BOX (3"X0.128"); OR 2 STAPLES, 1"CROWN, 16ga.,1 ¾" LONG	FACE NAIL
20	1" X 8" AND WIDER SHEATHING TO EACH BEARING	3-8d BOX (2 ½"X0.113"); OR 3-8d COMMON (2 ½"X0.131"); OR 3-10d BOX (3"X0.128"); OR 3 STAPLES, 1"CROWN, 16ga.,1 ¾" LONG	FACE NAIL
		WIDER THAN 1" X 8" 4-8d BOX (2 ½"X0.113"); OR 3-8d COMMON (2 ½"X0.131"); OR 3-10d BOX (3"X0.128"); OR 4 STAPLES, 1"CROWN, 16ga.,1 ¾" LONG	
		FLOOR	
21	JOIST TO SILL, TOP PLATE OR GIRDER	4-8d BOX (2 ½"X0.113"); OR 3-8d COMMON (2 ½"X0.131"); OR 3-10d BOX (3"X0.128"); OR 3-3"X0.131" NAILS	TOE NAIL
		8d BOX (2 ½"X0.113")	4" O.C. TOE NAIL
22	RIM JOIST, BAND JOIST OR BLOCKING TO SILL OR TOP PLATE (ROOF APPLICATIONS ALSO)	8d COMMON (2 ½"X0.131"); OR 10d BOX (3"X0.128"); OR 3"X0.131" NAILS	6" O.C. TOE NAIL
23	1" X 6" SUBFLOOR OR LESS TO EACH JOIST	3-8d BOX (2 ½"X0.113"); OR 2-8d COMMON (2 ½"X0.131"); OR 3-10d BOX (3"X0.128"); OR 2 STAPLES, 1"CROWN, 16ga.,1 ¾" LONG	FACE NAIL
24	2" SUBFLOOR TO JOIST OR GIRDER	3-16d BOX (3 ½"X0.135"); OR 2-16d COMMON (3 ½"X0.162")	BLIND AND FACE NAIL
25	2" PLANKS (PLANK & BEAM - FLOOR & ROOF)	3-16d BOX (3 ½"X0.135"); OR 2-16d COMMON (3 ½"X0.162")	AT EACH BEARING, FACE NAIL
26	BAND OR RIM JOIST TO JOIST	3-16d COMMON (3 ½"X0.162") 4-10 BOX (3"X0.128"); OR 4-3"X0.131" NAILS ; OR 4-3"X 14ga. STAPLES, $\frac{7}{16}$" CROWN	END NAIL
27	BUILT-UP GIRDERS AND BEAMS, 2-INCH LUMBER LAYERS	20d COMMON (4"X0.192"); OR	NAIL EACH LAYER AS FOLLOWS: 32" O.C. AT TOP AND BOTTOM AND STAGGERED
		10d BOX (3"X0.128"); OR 3"X0.131" NAILS	24" O.C. FACE NAIL AT TOP AND BOTTOM STAGGERED ON OPPOSITE SIDES
		AND: 2-20d COMMON (4"X0.192"); OR 3-10d BOX (3"X0.128"); OR 3-3"X0.131" NAILS	FACE NAIL AT ENDS AND AT EACH SPLICE
28	LEDGER STRIP SUPPORTING JOISTS OR RAFTERS	4-16d BOX (3 ½"X0.135");OR 3-16d COMMON (3 ½"X0.162"); OR 4-10d BOX (3"X0.128"); OR 4-3"X0.131 NAILS	AT EACH JOIST OR RAFTER, FACE NAIL
29	BRIDGING TO JOIST	2-10d (3"X0.128")	EACH END, TOE NAIL

TABLE R602.3(3)
WOOD PANEL WALL SHEATHING FASTENING SCHEDULE ^{a,b,c}

MINIMUM NAIL		MINIMUM WOOD STRUCTURAL PANEL SPAN RATING	MINIMUM NOMINAL PANEL THICKNESS (INCHES)	MAXIMUM WALL STUD SPACING (INCHES)	PANEL NAIL SPACING		ULTIMATE DESIGN WIND SPEED V_{ULT}(MPH)		
							WIND EXPOSURE CATEGORY		
SIZE	PENETRATION (INCHES)				EDGES (INCHES O.C.)	FIELD (INCHES O.C.)	B	C	D
6d COMMON (2.0"X0.113")	1.5	24/0	3/8	16	6	12	140	115	110
8d COMMON (2.5"X0.131")	1.75	24/16	7/16	16	6	12	170	140	135
				24	6	12	140	115	110

FOR SI: 1 inch = 25.4 mm, 1 MILE PER HOUR = 0.447 m/s

a. PANEL STRENGTH AXIS PARALLEL OR PERPENDICULAR TO SUPPORT. THREE-PLY PLYWOOD SHEATHING WITH STUD SPACING MORE THAN 16" ON CENTER SHALL BE APPLIED WITH PANEL STRENGTH AXIS PERPENDICULAR TO SUPPORT.
b. TABLE BASED ON WIND PRESSURES ACTING TOWARD AND AWAY FROM BUILDING SURFACES IN ACCORDANCE WITH SECTION R301.2. LATERAL BRACING REQUIREMENTS SHALL BE IN ACCORDANCE WITH SECTION R602.10.
c. WOOD STRUCTURAL PANELS WITH SPAN RATINGS OF WALL-16 OR WALL-24 SHALL BE PERMITTED AS AN ALTERNATE TO PANELS WITH A 24/0 SPAN RATING. PLYWOOD SIDING RATED 16 O.C. OR 24 O.C. SHALL BE PERMITTED AS AN ALTERNATE TO PANELS WITH A 24/16 SPAN RATING. WALL-16 AND PLYWOOD SIDING 16 O.C. SHALL BE USED WITH STUDS SPACED NOT MORE THAN 16" ON CENTER.

TABLE R602.3(1)
FASTENING SCHEDULE CONTINUED

ITEM	DESCRIPTION OF BUILDING ELEMENTS	NUMBER AND TYPE OF FASTENER ^{a,b,c}	SPACING OF FASTENERS: EDGES (INCHES) ^{h}	SPACING OF FASTENERS: INTERMEDIATE SUPPORTS ^{c,e} (INCHES)
	WOOD STRUCTURAL PANELS, SUBFLOOR, ROOF AND INTERIOR WALL SHEATHING TO FRAMING AND PARTICLE BOARD WALL SHEATHING TO FRAMING [SEE TABLE R602.3(3) FOR WOOD STRUCTURAL PANEL EXTERIOR WALL SHEATHING TO WALL FRAMING]			
30	⅜" - ½"	6d COMMON (2"X0.113") NAIL (SUBFLOOR, WALL) ^{i} 8d COMMON (2 ½"X0.131")NAIL (ROOF)	6	12 ^{f}
31	$^{19}/_{32}$" - 1"	8d COMMON NAIL (2 ½"X0.131")	6	12 ^{f}
32	1 ⅛" - 1 ¼"	10d COMMON (3"X0.148") NAIL; OR 8d (2 ½"X0.131") DEFORMED NAIL	6	12
	OTHER WALL SHEATHING ^{g}			
33	1 ½" STRUCTURAL CELLULOSIC FIBERBOARD SHEATHING	1 ½" GALVANIZED ROOFING NAIL, $^7/_{16}$" HEAD DIAMETER, OR 1" CROWN STAPLE 16 ga., 1 ¼" LONG	3	6
34	$^{25}/_{32}$" STRUCTURAL CELLULOSIC FIBERBOARD SHEATHING	1 ¾" GALVANIZED ROOFING NAIL, $^7/_{16}$" HEAD DIAMETER, OR 1" CROWN STAPLE 16 ga., 1 ¼" LONG	3	6
35	½" GYPSUM SHEATHING ^{d}	1 ½" GALVANIZED ROOFING NAIL; STAPLE GALVANIZED, 1 ½" LONG; 1 ¼" SCREWS, TYPE W OR S	7	7
36	⅝" GYPSUM SHEATHING ^{d}	1 ¾" GALVANIZED ROOFING NAIL; STAPLE GALVANIZED, 1 ⅝" SCREWS, TYPE W OR S	7	7
	WOOD STRUSTRUAL PANELS, COMBINATION SUBFLOOR UNDERLAYMENT TO FRAMING			
37	¾" AND LESS	6d DEFORMED (2"X0.120") NAIL; OR 8d COMMON (2 ½"X0.131") NAIL	6	12
38	⅞" - 1"	8d COMMON (2"X0.131") NAIL; OR 8d DEFORMED (2 ½"X0.120") NAIL	6	12
39	1 ⅛" - 1 ¼"	10d COMMON (3"X0.148") NAIL; OR 8d DEFORMED (2 ½"X0.120") NAIL	6	12

FOR SI: 1 inch = 25.4 mm, 1 foot = 304.8 mm, 1 MILE PER HOUR = 0.447 m/s; 1 ksi = 6.895 MPa

a. NAILS ARE SMOOTH-COMMON, BOX OR DEFORMED SHANKS EXCEPT WHERE OTHERWISE STATED. NAILS USED FOR FRAMING AND SHEATHING CONNECTIONS SHALL HAVE MINIMUM AVERAGE BENDING YIELD STRENGTHS AS SHOWN: 80 KSI FOR SHANK DIAMETER OF 0.192 INCH (20d COMMON NAIL), 90 KSI FOR SHANK DIAMETERS LARGER THAN 0.142 INCH BUT NOT LARGER THAN 0.177 INCH, AND 100 KSI FOR SHANK DIAMETERS OF 0.142 INCH OR LESS.
b. STAPLES ARE 16 GAGE WIRE AND HAVE A MINIMUM 7/16-INCH ON DIAMETER CROWN WIDTH.
c. NAILS SHALL BE SPACED AT NOT MORE THAN 6 INCHES ON CENTER AT ALL SUPPORTS WHERE SPANS ARE 48 INCHES OR GREATER.
d. FOUR-FOOT BY 8-FOOT OR 4-FOOT BY 9-FOOT PANELS SHALL BE APPLIED VERTICALLY.
e. SPACING OF FASTENERS NOT INCLUDED IN THIS TABLE SHALL BE BASED ON TABLE R602.3 (2).
f. WHERE THE ULTIMATE DESIGN WIND SPEED IS 130 MPH OR LESS, NAILS FOR ATTACHING WOOD STRUCTURAL PANEL ROOF SHEATHING TO GABLE END WALL FRAMING SHALL BE SPACED 6 INCHES ON CENTER. WHERE THE ULTIMATE DESIGN WIND SPEED IS GREATER THAN 130 MPH, NAILS FOR ATTACHING PANEL ROOF SHEATHING TO INTERMEDIATE SUPPORTS SHALL BE BE SPACED 6 INCHES ON CENTER FOR MINIMUM 48 INCH DISTANCE FROM RIDGES, EAVES AND GABLE END WALLS; AND 4 INCHES ON CENTER TO GABLE END WALL FRAMING.
g. GYPSUM SHEATHING SHALL CONFORM TO ASTM C 1396 AND SHALL BE INSTALLED IN ACCORDANCE WITH GA 253. FIBERBOARD SHEATHING SHALL CONFORM TO ASTM C 208.
h. SPACING OF FASTENERS ON FLOOR SHEATHING EDGES APPLIES TO PANEL EDGES SUPPORTED BY FRAMING MEMBERS AND REQUIRED BLOCKING AND AT FLOOR PERIMETERS ONLY. SPACING OF FASTENERS ON ROOF SHEATHING PANEL EDGES APPLIES TO PANEL EDGES SUPPORTED BY FRAMING MEMBERS AND REQUIRED BLOCKING. BLOCKING OF ROOF OR FLOOR SHEATHING PANEL EDGES PERPENDICULAR TO THE FRAMING MEMBERS NEED NOT BE PROVIDED EXCEPT AS REQUIRED BY OTHER PROVISIONS OF THIS CODE. FLOOR PERIMETER SHALL BE SUPPORTED BY FRAMING MEMBERS OR SOLID BLOCKING.
i WHERE A RAFTER IS FASTENED TO AN ADJACENT PARALLEL CEILING JOIST IN ACCORDANCE WITH THIS SCHEDULE , PROVIDE TWO TOE NAILS ON ONE SIDE OF THE RAFTER AND TOE NAILS FROM THE CEILING JOIST TO TOP PLATE IN ACCORDANCE WITH THIS SCHEDULE. THE TOE NAIL ON THE OPPOSITE SIDE OF THE RATER SHALL NOT BE REQUIRED.

TABLE R802.11 RAFTER OR TRUSS UPLIFT CONNECTION FORCES FROM WIND (ASD) (POUNDS PER CONNECTION) ^{a,b,c,d,e,f,g,h}

RAFTER OR TRUSS SPACING	ROOF SPAN (FEET)	EXPOSURE B			
		ULTIMATE DESIGN WIND SPEED Vult (mph)			
		130 mph		140 mph	
		ROOF PITCH		ROOF PITCH	
		<5:12	≥5:12	<5:12	≥5:12
12" O.C.	12	95	88	122	113
	18	122	112	157	146
	24	149	137	192	178
	28	167	153	216	200
	32	185	170	240	222
	36	203	186	264	244
	42	230	211	300	278
	48	258	236	336	311
16" O.C.	12	126	117	162	150
	18	162	149	209	194
	24	198	182	255	237
	28	222	203	287	266
	32	246	226	319	295
	36	270	247	351	325
	42	306	281	399	370
	48	343	314	447	414

RAFTER OR TRUSS SPACING	ROOF SPAN (FEET)	EXPOSURE C			
		ULTIMATE DESIGN WIND SPEED Vult (mph)			
		130 mph		140 mph	
		ROOF PITCH		ROOF PITCH	
		<5:12	≥5:12	<5:12	≥5:12
12" O.C.	12	161	151	198	186
	18	208	195	257	242
	24	256	239	317	298
	28	289	269	358	335
	32	321	299	398	373
	36	353	329	438	411
	42	402	375	499	468
	48	450	420	560	524
16" O.C.	12	214	201	263	247
	18	277	259	342	322
	24	340	318	422	396
	28	384	358	476	446
	32	427	398	529	496
	36	469	438	583	547
	42	535	499	664	622
	48	599	559	745	697

FOR SI: 1 INCH = 25.4 mm, 1 FOOT = 304.8mm, 1 MILE PER HOUR= 0.447 m/s,
1 POUND =0.454kg, 1 POUND PER SQUARE FOOT = 47.9 N/m², 1 plf 14.6 N/m

a. THE UPLIFT CONNECTION FORCES ARE BASED ON A MAXIMUM 33 FOOT MEAN ROOF HEIGHT AND WIND EXPOSURE CATEGORY B OR C. FOR EXPOSURE D, THE UPLIFT CONNECTION FORCE SHALL BE SELECTED FROM THE EXPOSURE C PORTION OF THE TABLE USING THE NEXT HIGHEST TABULATED ULTIMATE DESIGN WIND SPEED. THE ADJUSTMENT COEFFICIENTS IN TABLE R301.2(3) SHALL NOT BE USED TO MULTIPLY THE TABULATED FORCES FOR EXPOSURE C AND D OR FOR THE OTHER MEAN ROOF HEIGHTS.
b.THE UPLIFT CONNECTION FORCES INCLUDE AN ALLOWANCE FOR ROOF AND CEILING ASSEMBLY DEAD LOAD OF 15 PSF.
c. THE TABULATED UPLIFT CONNECTION FORCES ARE LIMITED TO A MAXIMUM ROOF OVERHANG OF 24 INCHES.
d. THE TABULATED UPLIFT CONNECTION FORCES SHALL BE PERMITTED TO BE MULTIPLIED BY 0.75 FOR CONNECTIONS NOT LOCATED WITHIN 8 FEET OF BUILDING CORNERS.
e. FOR BUILDINGS WITH HIP ROOFS WITH 5:12 AND GREATER PITCH, THE TABULATED UPLIFT CONNECTION FORCES SHALL BE PERMITTED TO BE MULTIPLIED BY 0.70. THIS REDUCTION SHALL NOT BE COMBINED WITH ANY OTHER REDUCTION IN TABULATED FORCES.
f. FOR WALL TO WALL AND WALL TO FOUNDATION CONNECTIONS, THE UPLIFT CONNECTION FORCE SHALL BE PERMITTED TO BE REDUCED BY 60 plf FOR EACH FULL WALL ABOVE.
g. LINEAR INTERPOLATION BETWEEN TABULATED ROOF SPANS AND WIND SPEEDS SHALL BE PERMITTED.
h. THE TABULATED FORCES FOR A 12-INCH ON CENTER SPACING SHALL BE PERMITTED TO BE USED TO DETERMINE THE UPLIFT LOAD IN POUNDS PER LINEAR FOOT.

TABLE R602.3(5) SIZE, HEIGHT AND SPACING OF WOOD STUDS ^{a}

STUD SIZE (INCHES)	BEARING WALLS					NON-BEARING WALLS	
	LATERALLY UNSUPPORTED STUD HEIGHT ^{a} (FEET)	MAXIMUM SPACING WHEN SUPPORTING A ROOF-CEILING ASSEMBLY OR A HABITABLE ATTIC ASSEMBLY, ONLY (INCHES)	MAXIMUM SPACING WHEN SUPPORTING ONE FLOOR, PLUS A ROOF-CEILING ASSEMBLY OR A HABITABLE ATTIC ASSEMBLY (INCHES)	MAXIMUM SPACING WHEN SUPPORTING TWO FLOORS, PLUS A ROOF-CEILING ASSEMBLY OR A HABITABLE ATTIC ASSEMBLY (INCHES)	MAXIMUM SPACING WHEN SUPPORTING TWO SUPPORTING ONE FLOOR HEIGHT ^{a} (INCHES)	LATERALLY UNSUPPORTED STUD HEIGHT ^{a} (FEET)	LATERALLY UNSUPPORTED STUD HEIGHT ^{a} (FEET)
		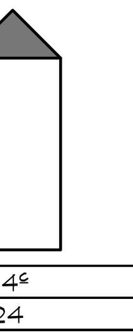	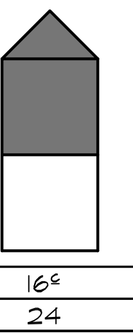		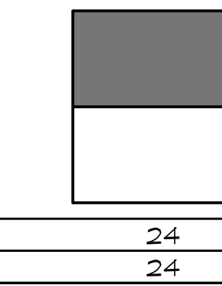		
2X4	10	24 ^{c}	16 ^{c}	--	24	10	16
2X6	10	24	24	16	24	20	24

FOR SI: 1 INCH = 25.4 mm, 1 FOOT = 304.8mm
a. LISTED HEIGHT ARE DISTANCES BETWEEN POINTS LATERAL SUPPORT PLACED PERPENDICULAR TO THE PLANE OF THE WALL. BEARING WALLS SHALL BE SHEATHED ON NOT LESS THAN ONE SIDE OR BRIDGING SHALL BE INSTALLED NOT GREATER THAN 4 FEET APART MEASURED VERTICALLY FROM EITHER END OF THE STUD. INCREASES IN UNSUPPORTED HEIGHT ARE PERMITTED WHERE IN COMPLIANCE WITH EXCEPTION 2 OF SECTION R602.3.1 OR DESIGNED IN ACCORDANCE WITH ACCEPTED ENGINEERING PRACTICE.
b. SHALL NOT BE USED IN EXTERIOR WALLS
c. A HABITABLE ATTIC ASSEMBLY SUPPORTED BY 2X4 STUDS IS LIMITED TO A ROOF SPAN OF 32 FEET. WHERE THE ROOF SPAN EXCEEDS 32 FEET, THE WALL STUDS SHALL BE INCREASED TO 2X6 OR THE STUDS SHALL BE DESIGNED IN ACCORDANCE WITH ACCEPTED ENGINEERING PRACTICE.

TABLE R602.10.4- BRACING METHODS

METHODS, MATERIAL		MINIMUM THICKESS	FIGURE	CONNECTION CRITERIA ^{a}: FASTENERS	CONNECTION CRITERIA ^{a}: SPACING
CONTINUOUS SHEATHING METHODS	CS-WSP CONTINUOUSLY SHEATHED WOOD STRUCTURAL PANEL	⅜"	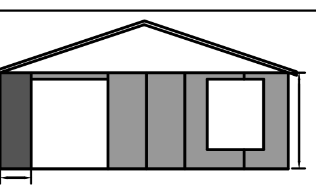	EXTERIOR SHEATHING PER TABLE R602.3 (3)	6" EDGES 12" FIELD
				INTERIOR SHEATHING PER TABLE R602.3 (1) or R602.3 (2)	VARIES BY FASTENER
	CS-G ^{b,c} CONTINUOUSLY SHEATHED WOOD STRUCTURAL PANEL ADJACENT TO GARAGE OPENINGS	⅜"	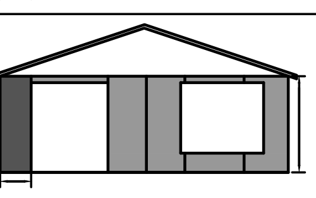	SEE METHOD CS-WSP	SEE METHOD CS-WSP
	CS-PF CONTINUOUSLY SHEATHED PORTAL FRAME	$^7/_{16}$"	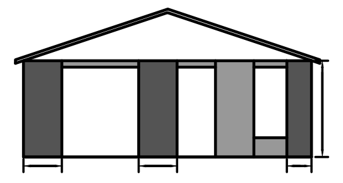	SEE SECTION R602.10.6.4	SEE SECTION R602.10.6.4
	CS-SFB ^{d} CONTINUOUSLY SHEATHED STRUCTURAL FIBERBOARD	½" or $^{25}/_{32}$" for maximum 16" stud spacing	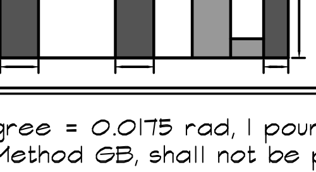	1 ½" long X 0.12 dia. (for ½" thick sheathing) 1 ¾" long X 0.12 dia. (for $^{25}/_{32}$" thick sheathing) galvanized roofing nails or 8d common (2 ½" long X 0.131" dia.) nails	3" EDGES 6" FIELD

FOR SI: 1 INCH = 25.4 mm, 1 FOOT = 304.8mm, 1 degree = 0.0175 rad, 1 pound per square foot=47.8 N/m², 1 mile per hour = 0.447 m/s.
a. Adhesive attachment of wall sheathing including Method GB, shall not be permitted in Seismic Design Categories C, D_0, D_1 and D_2.
b. Applies to panels next to garage door opening where supporting gable end wall or roof load only. Shall only be used on one wall of the garage. In Seismic Design Categories D_0, D_1, and D_2 roof covering dead load shall not exceed 3 psf.
c. Garage openings adjacent to a Method CS-G panel shall be provided with a header in accordance with Table R602.5 (1). A full height clear opening shall not be permitted to a Method CS-G panel.
d. Method CS-SFB does not apply in Seismic Design Categories D_0, D_1 , D_2.
e. Method applies to detached one and two-family dwellings in Seismic Design Categories D_0through D_2only.

TABLE R602.10.5
MINIMUM LENGTH OF BRACED WALL PANELS

METHOD		MINIMUM LENGTH (INCHES)					CONTRIBUTING LENGTH (INCHES)
	ADJACENT CLEAR OPENING HEIGHT (INCHES)	WALL HEIGHT: 8 FEET	9 FEET	10 FEET	11 FEET	12 FEET	
CS-WSP	≤ 64	24	27	30	33	36	ACTUAL

TABLE R507.2
DECK LEDGER CONNECTION TO BAND JOIST ^{a,b}
(DECK LIVE LOAD=40 PSF, DECK DEAD LOAD=10 PSF, SNOW LOAD ≤ 40 PSF

CONNECTION DETAILS	JOIST SPAN: 6' AND LESS	6' 1" TO 8'	8'1" TO 10'	10'1 TO 12'	12'1 TO 14'	14'1" TO 16'	16'1 TO 18'
	ON-CENTER SPACING OF FASTENERS						
½ INCH DIAMETER LAG SCREW ^{c,d} WITH ½ INCH MAXIMUM SHEATHING	30	23	18	15	13	11	10
½ INCH DIAMETER BOLT WITH ½ INCH MAXIMUM SHEATHING ^{d}	36	36	34	29	24	21	19
½ INCH DIAMETER BOLT WITH 1-INCH MAXIMUM SHEATHING ^{e}	36	36	29	24	21	18	16

FOR SI: 1 inch = 25.4 mm, 1 foot =304.8 mm, 1 pound per square foot = 0.0479 kPa
a. Ledgers shall be flashed in accordance with Section R703.4 to prevent water from contracting the house band joist.
b. Snow load shall not be assumed to act concurrently with live load.
c. The tip of the lag screw shall fully extend beyond the inside face of the band joist.
d. Sheathing shall be wood structural panel or solid sawn lumber
e. Sheathing shall be permitted to be wood structural panel, gypsum board, fiberboard, lumber or foam sheathing. Up to 1/2-inch thickness of stacked washers shall be permitted to substitute for up to 1/2-inch of allowable sheathing thickness where combined with wood panel or lumber sheathing.

TABLE R507.2.1
PLACEMENT OF LAG SCREWS AND BOLTS IN DECK LEDGERS AND BAND JOISTS

	MINIMUM END AND EDGE DISTANCES AND SPACING BETWEEN ROWS			
	TOP EDGE	BOTTOM EDGE	ENDS	ROW SPACING
LEDGER ^{a}	2 INCHES ^{d}	¾ INCH	2 INCHES ^{b}	1 ⅝ INCHES ^{b}
BAND JOIST ^{c}	¾ INCH	2 INCHES	2 INCHES ^{b}	1 ⅝ INCHES ^{b}

FOR SI: 1 INCH=25.4 MM
a. LAG SCREWS OR BOLTS SHALL BE STAGGERED FROM THE TOP TO THE BOTTOM ALONG THE HORIZONTAL RUN OF THE DECK LEDGER IN ACCORDANCE WITH FIGURE R507.2.1(1).
b. MAXIMUM 5 INCHES.
c. FOR ENGINEERED RIM JOISTS, THE MANUFACTURER'S RECOMMENDATIONS SHALL GOVERN.
d. THE MINIMUM DISTANCE FROM BOTTOM ROW OF LAG SCREWS OR BOLTS TO THE EDGE OF THE LEDGER SHALL BE IN ACCORDANCE WITH FIGURE R507.2.1(1).

TABLE: R402.1.4 - 2015 INTERNATIONAL ENERGY CONSERVATION CODE
EQUIVALENT U-FACTORS

CLIMATE ZONE	FENESTRATION U-FACTOR	SKYLIGHT U-FACTOR	CEILING U-FACTOR	FRAME WALL U-VALUE	MASS WALL U-VALUE	FLOOR U-VALUE	BASEMENT WALL U-VALUE	CRAWL SPACE WALL U-VALUE
4 EXCEPT MARINE	0.35	0.55	0.026	0.060	0.098	0.047	0.059	0.065
5 AND MARINE 4	0.32	0.55	0.026	0.060	0.082	0.033	0.050	0.055
PROPOSED	AS MAX. -V.I.F.	AS MAX. -V.I.F.	AS MAX. -V.I.F.	AS MIN.	AS MIN.	AS MIN.	N/A	AS MIN.

TABLE: R402.1.2 - 2015 INTERNATIONAL ENERGY CONSERVATION CODE
INSULATION AND FENESTRATION REQUIREMENTS BY COMPONENT

CLIMATE ZONE	MAXIMUM		GLAZED FENESTRATION SHGC ^{b,e}	MINIMUM						
	FENESTRATION U-FACTOR ^{b}	SKYLIGHT U-FACTOR ^{b}		CEILING R-VALUE	WALL R-VALUE	MASS WALL R-VALUE ^{i}	FLOOR R-VALUE	BASEMENT WALL R-VALUE ^{c}	SLAB R-VALUE & DEPTH ^{d}	CRAWL SPACE WALL R-VALUE ^{e}
4 EXCEPT MARINE	0.35	0.55	0.40	49	20 OR 13 + 5 ^{h}	8/13	19	10 CONT. OR 13 CAVITY	10 / 2FT.	10 CONT. OR 13 CAVITY
5 AND MARINE 4	0.32	0.55	NR	49	20 OR 13 + 5 ^{h}	13/17	30 ^{g}	15 CONT. OR 19 CAVITY	10 / 2FT.	15 CONT. OR 19 CAVITY
PROPOSED	AS MAX. -V.I.F.	AS MAX. -V.I.F.	AS MAX. -V.I.F.	AS MIN.	AS MIN.	AS MIN.	AS MIN.	N/A	AS MIN.	AS MIN.

* REFER TO CODE BOOK FOR SUPPLEMENT LETTER FOOT NOTES

R301.2.2. PROTECTION OF OPENINGS. EXTERIOR GLAZING IN BUILDINGS LOCATED IN WINDBORNE DEBRIS REGIONS SHALL BE PROTECTED FROM WINDBORNE DEBRIS. GLAZED OPENING PROTECTION FOR WINDBORNE DEBRIS SHALL MEET THE REQUIREMENTS OF THE LARGE MISSILE TEST OF ASTM E 1996 AND ASTM E 1886 AS MODIFIED IN SECTION 301.2.1.2.1. GARAGE DOOR GLAZED OPENING PROTECTION FOR WINDBORNE DEBRIS SHALL MEET THE REQUIREMENTS OF AN IMPACT-RESISTING STANDARD OR ANSI/DASMA 115. (SEE TABLE BELOW)

EXCEPTION:
WOOD STRUCTURAL PANELS WITH A THICKNESS OF NOT LESS THAN $^7/_{16}$ INCH AND A SPAN OF NOT MORE THAN 8 FEET SHALL BE PERMITTED FOR OPENING PROTECTION. PANELS SHALL BE PRECUT AND ATTACHED TO THE FRAMING SURROUNDING THE OPENING CONTAINING THE PRODUCT WITH THE GLAZED OPENING. PANELS SHALL BE PREDRILLED AS REQUIRED FOR THE ANCHORAGE METHOD AND SHALL BE SECURED WITH THE ATTACHMENT HARDWARE PROVIDED. ATTACHMENTS SHALL BE DESIGNED TO RESIST THE COMPONET AND CLADDING LOADS DETERMINED IN ACCORDANCE WITH EITHER TABLE R301.2(2) OR ASCE 7, WITH THE PERMANENT CORROSION-RESISTANT ATTACHMENT HARDWARE PROVIDED AND ANCHORS PERMANENTLY INSTALLED ON THE BUILDING. ATTACHMENT IN ACCORDANCE WITH TABLE R301.2.1.2 IS PERMITTED FOR BUILDINGS WITH A MEAN ROOF HEIGHT OF 45 FEET OR LESS WHERE THE ULTIMATE DESIGN WIND SPEED, IS 180 MPH OR LESS.

TABLE R301.2.1.2: WINDBORNE DEBRIS PROTECTION FASTENING SCHEDULE FOR WOOD STRUCTURAL PANELS

FASTENER TYPE	FASTENER SPACING: PANEL SPAN ≤4 FOOT	4 FOOT < PANEL SPAN ≤ 6 FOOT	6 FOOT < PANEL SPAN ≤ 8 FOOT
NO. 8 WOOD SCREW BASED ANCHOR WITH 2 INCH EMBEDMENT LENGTH	16	10	8
NO. 10 WOOD SCREW BASED ANCHOR WITH 2 INCH EMBEDMENT LENGTH	16	12	9
¼ INCH LAG SCREW BASED ANCHOR WITH 2 INCH EMBEDMENT LENGTH	16	16	16

a. THIS TABLE IS BASED ON 180 MPH ULTIMATE DESIGN WIND SPEED AND A 33 FOOT MEAN ROOF HEIGHT.
b. FASTENERS SHALL BE INSTALLED AT OPPOSING ENDS OF THE WOOD STRUCTURAL PANEL. FASTENERS SHALL BE LOCATED NOT LESS THAN INCH FROM THE EDGE OF THE PANEL.
c. ANCHORS SHALL PENETRATE THROUGH THE EXTERIOR WALL COVERING WITH AN EMBEDMENT LENGTH OF NOT LESS THAN 2 INCHES INTO THE BUILDING FRAME. FASTENERS SHALL BE LOCATED NOT LESS THAN 2 ½ INCHES FROM THE EDGE OF THE CONCRETE BLOCK OR CONCRETE.
d. PANELS ATTACHED TO MASONRY OR MASONRY/STUCCO SHALL BE ATTACHED USING VIBRATION-RESISTANT ANCHORS HAVING AN ULTIMATE WITHDRAWAL CAPACITY OF NOT LESS THAN 1,500 POUNDS.

ALLOWABLE DEFLECTION OF STRUCTURAL MEMBERS* AS PER TABLE R301.7 OF THE 2015 INTERNATIONAL RESIDENTIAL CODE

STRUCTURAL MEMBER	ALLOWABLE DEFLECTION
RAFTERS HAVING SLOPES GREATER THAN 3/12 WITH NO FINISHED CEILING ATTACHED TO RAFTERS	L/180
INTERIOR WALLS AND PARTITIONS	H/180
FLOORS	L/360
CEILING WITH BRITTLE FINISHES (INCLUDING PLASTER AND STUCCO)	L/360
CEILINGS WITH FLEXIBLE FINISHES (INCLUDING GYPSUM BOARD)	L/240
ALL OTHER STRUCTURAL MEMBERS	L/240
EXTERIOR WALLS - WIND LOAD ^{a} WITH PLASTER OR STUCCO FINISHES	H/360
EXTERIOR WALLS - WIND LOADS ^{a} WITH OTHER BRITTLE FINISHES	H/240
EXTERIOR WALLS - WIND LOADS ^{a} WITH FLEXIBLE FINISHES.	H/120 ^{d}
LINTELS SUPPORTING MASONRY VENEER WALLS ^{e}	L/600

NOTE: L=SPAN LENGTH, H=SPAN HEIGHT
a. FOR THE PURPOSE OF THE DETERMINING DEFLECTION LIMITS HEREIN, THE WIND LOAD SHALL BE PERMITTED TO BE TAKEN AS 0.7 TIMES THE COMPONENT AND CLADDING (ASD) LOADS OBTAINED FROM THE TABLE R301.2(2).
b. FOR CANTILEVER MEMBERS, L SHALL BE TAKEN AS TWICE THE LENGTH OF THE CANTILEVER.
c. FOR ALUMINUM STRUCTURAL MEMBERS OR PANELS USED IN ROOFS OR WALLS OF SUNROOM ADDITIONS OR PATIO COVERS, NOT SUPPORTING EDGE OF GLASS, THE CONTINUOUS ALUMINUM STRUCTURAL MEMBERS SUPPORTING EDGE OF GLASS, THE TOTAL LOAD DEFLECTION SHALL NOT EXCEED L/175 FOR EACH GLASS LITE OR L/60 FOR THE ENTIRE LENGTH OF THE MEMBER, WHICHEVER IS MORE STRINGENT. FOR SANDWICH PANELS USED IN ROOFS OR WALLS OF SUNROOM ADDITIONS OR PATIO COVERS, THE TOTAL LOAD DEFLECTION SHALL NOT EXCEED L/120.
d. DEFLECTION FOR EXTERIOR WALLS WITH INTERIOR GYPSUM BOARD FINISH SHALL BE LIMITED TO AN ALLOWABLE DEFLECTION OF H/180.
e. REFER TO SECTION R703.8.2.

TOC ARCHITECTS
TODD O'CONNELL ARCHITECT P.C.
TODD O'CONNELL, AIA
1200 Veterans Memorial Highway
Suite 120
Hauppauge, NY 11788
P (631) 650-6666
F (631) 650-6667
C (516) 658-0325
www.tocarchitects.com
todd@tocarchitects.com

CONSULTANTS:

NYS LIC #027935

CHECKED BY: TOC
DRAWN BY: JCZ

REV #:	DATE:	NOTE:	BY:

PROPOSED ADDITION
LI RESIDENCE
424 LOCUST AVENUE
CENTRE ISLAND, NY 11530

DRAWING:

JOB#: LI-17-293
DATE: 02.24.20
SCALE: AS NOTED

DRAWING NUMBER
A.2

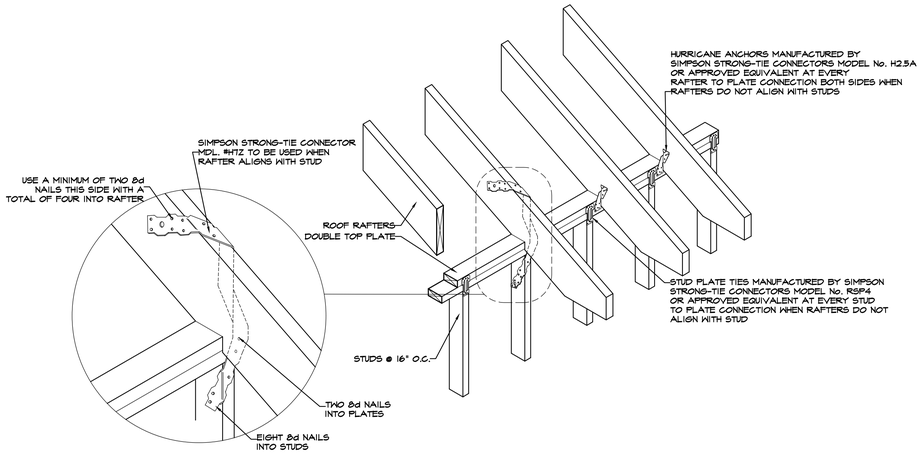

1 A.3 ROOF STRAPPING DETAIL

SCALE: 3/4" = 1'-0"

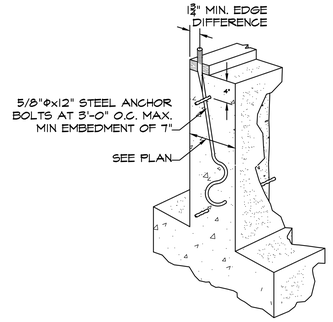

3 A.3 ANCHOR BOLT DETAIL

SCALE: 3/4" = 1'-0"

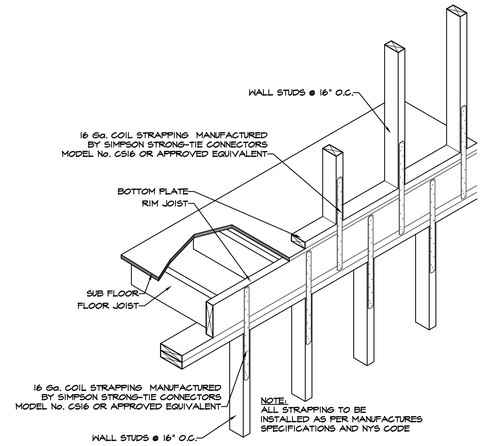

6 A.3 WALL STRAPPING DETAIL

SCALE: 3/4" = 1'-0"

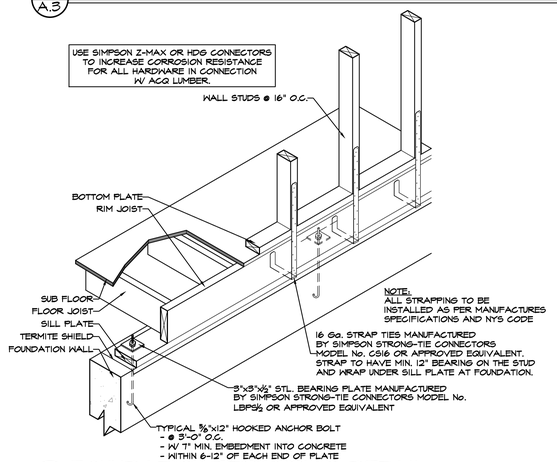

2 A.3 FOUNDATION STRAPPING DETAIL

SCALE: 3/4" = 1'-0"

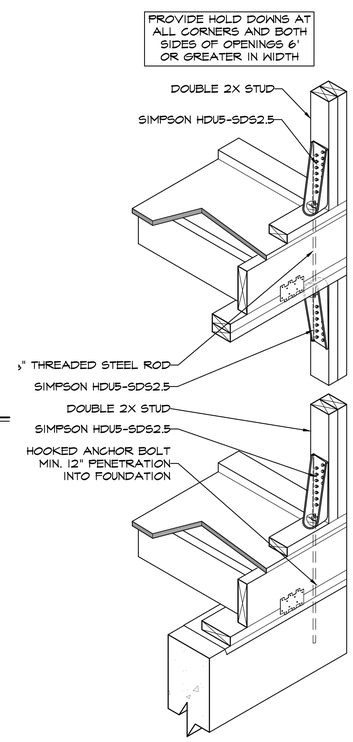

4 A.3 HOLD DOWN DETAIL

SCALE: 3/4" = 1'-0"

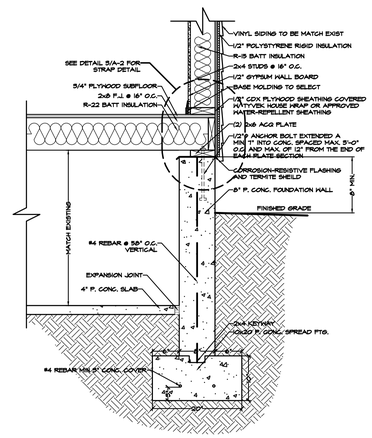

7 A.3 FOUNDATION DETAIL

SCALE: 3/4" = 1'-0"

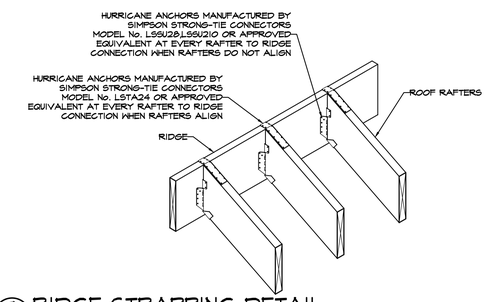

9 A.3 RIDGE STRAPPING DETAIL

SCALE: 3/4" = 1'-0"

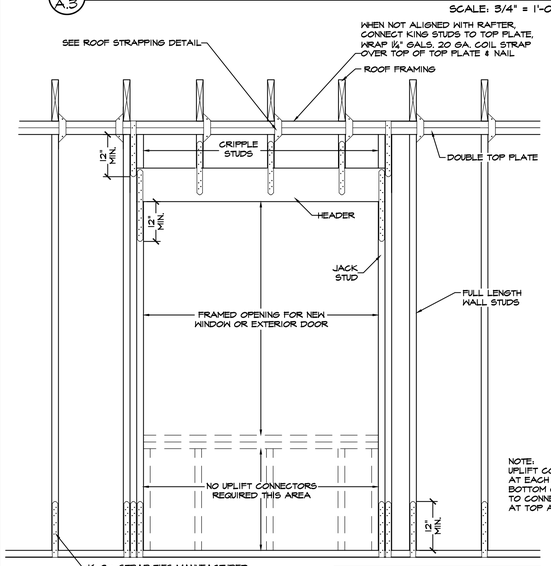

NOTE:
UPLIFT CONNECTION IS REQUIRED AT EACH END OF THE HEADER AND AT BOTTOM OF HEADER STUDS IN ADDITION TO CONNECTORS AT WALL STUDS AND AT TOP AND BOTTOM OF CRIPPLES.

5 A.3 UPLIFT CONNECTOR DETAIL

SCALE: 3/4" = 1'-0"

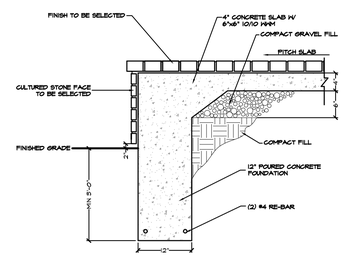

8 A.3 CHEEK WALL DETAIL

SCALE: NTS

TODD O'CONNELL, AIA
1200 Veterans Memorial Highway
Suite 120
Hauppauge, NY 11788
P (631) 650-6666
F (631) 650-6667
C (516) 658-0325
www.tocarchitects.com
todd@tocarchitects.com

CONSULTANTS:

NYS LIC #027935

THE DRAWINGS, SPECIFICATIONS AND OTHER DOCUMENTS PREPARED BY THE ARCHITECT FOR THIS PROJECT ARE THE INSTRUMENTS OF THE ARCHITECT AND THE ARCHITECT SHALL BE DEEMED THE AUTHOR OF THE DOCUMENTS AND SHALL RETAIN ALL COMMON LAW, STATUTORY AND OTHER RESERVED RIGHTS INCLUDING COPYRIGHT. THE DRAWINGS, SPECIFICATIONS AND OTHER DOCUMENTS PREPARED BY THE ARCHITECT FOR THIS PROJECT ARE NOT TO BE USED BY THE OWNER OR OTHERS ON OTHER PROJECTS, FOR ADDITIONS TO THIS PROJECT OR FOR COMPLETION OF THIS PROJECT BY OTHERS.

CHECKED BY: TOC

DRAWN BY: JCZ

REV #:	DATE:	NOTE:	BY:

PROPOSED ADDITION
LI RESIDENCE
424 LOCUST AVENUE
CENTRE ISLAND, NY 11530

DRAWING:

JOB#: LI-17-283
DATE: 02.24.20
SCALE: AS NOTED

DRAWING NUMBER
A.3

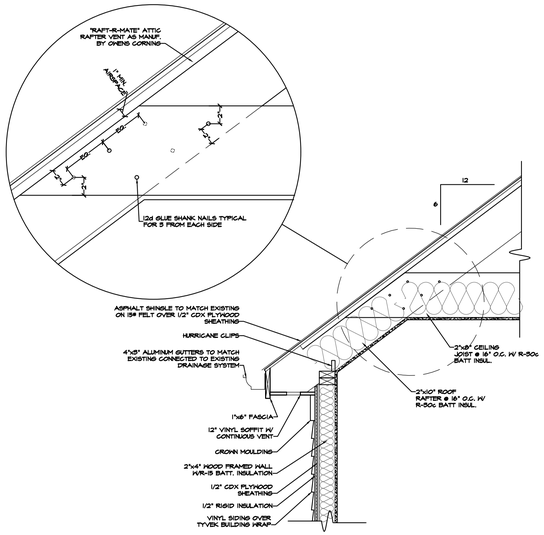

1/A.4 ROOF DETAIL

SCALE: 3/4" = 1'-0"

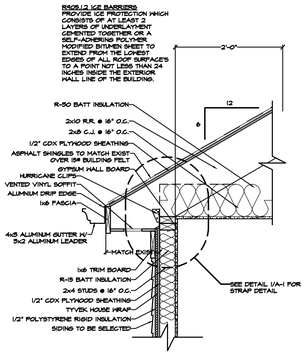

2/A.4 ROOF DETAIL

SCALE: 3/4" = 1'-0"

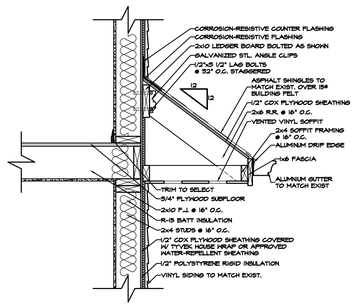

2/A.4 SKIRT ROOF DETAIL

SCALE: 3/4" = 1'-0"

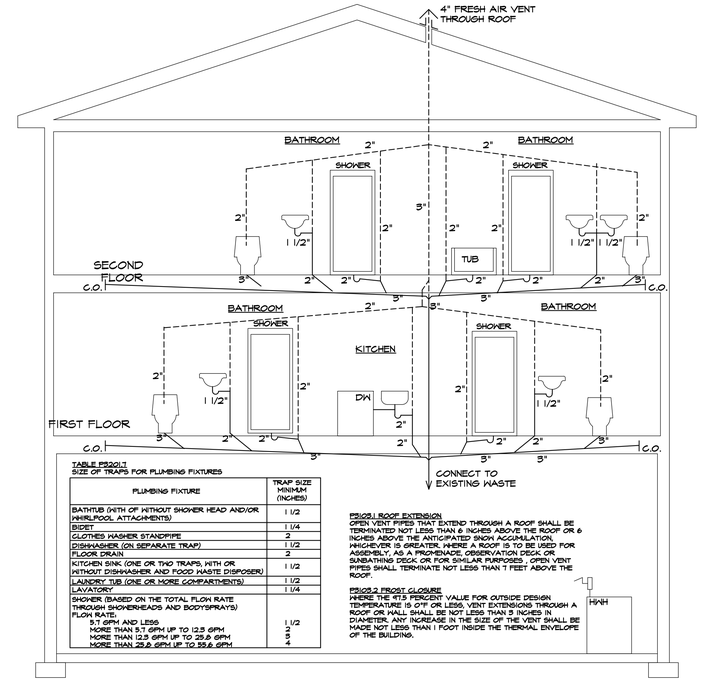

TABLE P3201.7
SIZE OF TRAPS FOR PLUMBING FIXTURES

PLUMBING FIXTURE	TRAP SIZE MINIMUM (INCHES)
BATHTUB (WITH OF WITHOUT SHOWER HEAD AND/OR WHIRLPOOL ATTACHMENTS)	1 1/2
BIDET	1 1/4
CLOTHES WASHER STANDPIPE	2
DISHWASHER (ON SEPARATE TRAP)	1 1/2
FLOOR DRAIN	2
KITCHEN SINK (ONE OR TWO TRAPS, WITH OR WITHOUT DISHWASHER AND FOOD WASTE DISPOSER)	1 1/2
LAUNDRY TUB (ONE OR MORE COMPARTMENTS)	1 1/2
LAVATORY	1 1/4
SHOWER (BASED ON THE TOTAL FLOW RATE THROUGH SHOWERHEADS AND BODYSPRAYS) FLOW RATE:	
5.7 GPM AND LESS	1 1/2
MORE THAN 5.7 GPM UP TO 12.5 GPM	2
MORE THAN 12.5 GPM UP TO 25.0 GPM	3
MORE THAN 25.0 GPM UP TO 55.0 GPM	4

P3103.1 ROOF EXTENSION
OPEN VENT PIPES THAT EXTEND THROUGH A ROOF SHALL BE TERMINATED NOT LESS THAN 6 INCHES ABOVE THE ROOF OR 6 INCHES ABOVE THE ANTICIPATED SNOW ACCUMULATION, WHICHEVER IS GREATER. WHERE A ROOF IS TO BE USED FOR ASSEMBLY, AS A PROMENADE, OBSERVATION DECK OR SUNBATHING DECK OR FOR SIMILAR PURPOSES , OPEN VENT PIPES SHALL TERMINATE NOT LESS THAN 7 FEET ABOVE THE ROOF.

P3103.3 FROST CLOSURE
WHERE THE 97.5 PERCENT VALUE FOR OUTSIDE DESIGN TEMPERATURE IS 0°F OR LESS, VENT EXTENSIONS THROUGH A ROOF OR WALL SHALL BE NOT LESS THAN 3 INCHES IN DIAMETER. ANY INCREASE IN THE SIZE OF THE VENT SHALL BE MADE NOT LESS THAN 1 FOOT INSIDE THE THERMAL ENVELOPE OF THE BUILDING.

PLUMBING RISER DIAGRAM

SCALE: 1/4" = 1'-0"

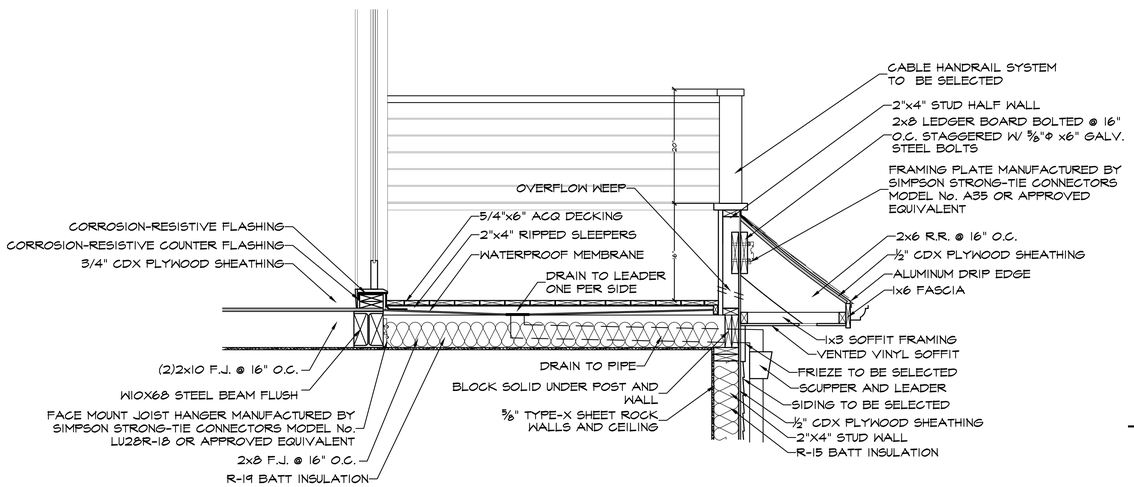

4/A.4 ROOF DECK DETAIL

SCALE: 3/4" = 1'-0"

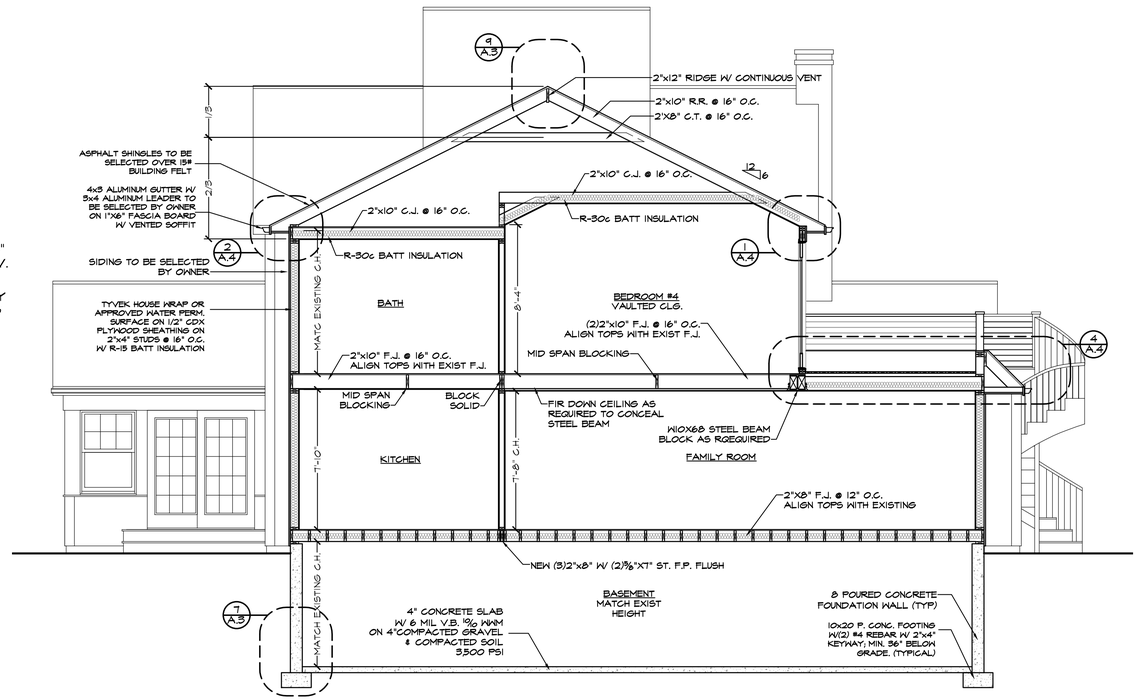

SECTION A

SCALE: 1/4" = 1'-0"

TOC ARCHITECTS
TODD O'CONNELL ARCHITECT P.C.
TODD O'CONNELL, AIA
1200 Veterans Memorial Highway
Suite 120
Hauppauge, NY 11788
P (631) 650-6666
F (631) 650-6667
C (516) 658-0325
www.tocarchitects.com
todd@tocarchitects.com

CONSULTANTS:

NYS LIC #027935

CHECKED BY: TOC

DRAWN BY: JCZ

REV #:	DATE:	NOTE:	BY:

PROPOSED ADDITION
LI RESIDENCE
424 LOCUST AVENUE
CENTRE ISLAND, NY 11530

DRAWING:

JOB#: LI-17-243
DATE: 02.24.20
SCALE: AS NOTED

DRAWING NUMBER
A.4

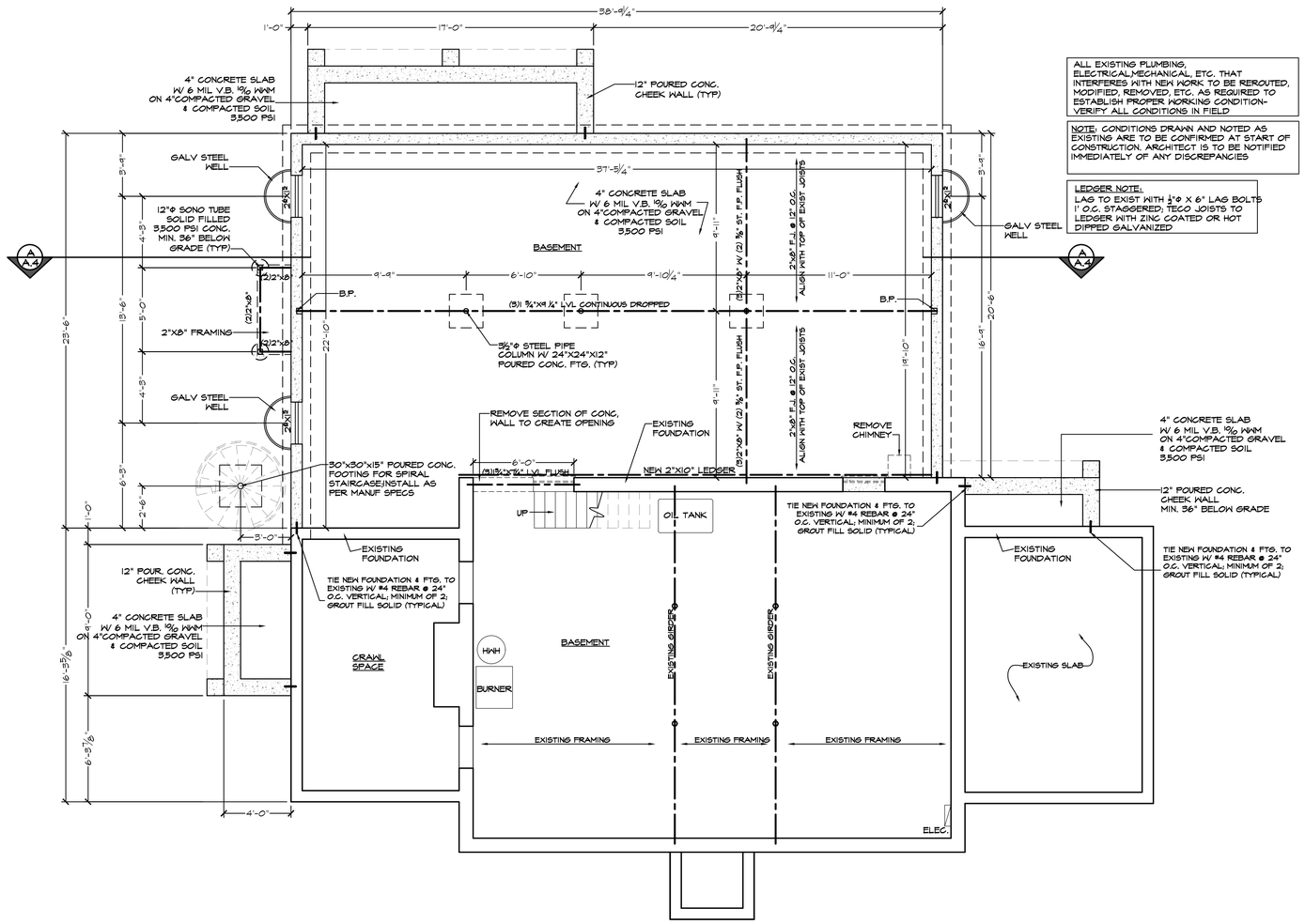

ALL EXISTING PLUMBING, ELECTRICAL,MECHANICAL, ETC. THAT INTERFERES WITH NEW WORK TO BE REROUTED, MODIFIED, REMOVED, ETC. AS REQUIRED TO ESTABLISH PROPER WORKING CONDITION- VERIFY ALL CONDITIONS IN FIELD

NOTE: CONDITIONS DRAWN AND NOTED AS EXISTING ARE TO BE CONFIRMED AT START OF CONSTRUCTION. ARCHITECT IS TO BE NOTIFIED IMMEDIATELY OF ANY DISCREPANCIES

LEDGER NOTE:
LAG TO EXIST WITH ½"ø X 6" LAG BOLTS 1' O.C. STAGGERED; TECO JOISTS TO LEDGER WITH ZINC COATED OR HOT DIPPED GALVANIZED

FOUNDATION PLAN

SCALE: 1/4" = 1'-0"

GENERAL NOTES

1. CARBON MONOXIDE ALARMS AND CARBON MONOXIDE DETECTORS SHALL BE INSTALLED IN BUILDINGS AS REQUIRED IN ACCORDANCE WITH SECTION 915.2 OF 2015 IFC (CARBON MONOXIDE DETECTION SYSTEMS) FOR RESIDENTIAL BUILDINGS . INTER-WIRED FIRE/SMOKE AND CARBON MONOXIDE DETECTORS WITH BATTERY BACKUP AS PER NFPA 72 AND 2015 INTERNATIONAL RESIDENTIAL CODE SEC. R314 AND R315 SHALL BE INSTALLED IN DWELLING UNITS OUTSIDE OF EACH SEPARATE SLEEPING AREA IN THE VICINITY OF THE BEDROOMS, WHERE A FUEL-BURNING APPLIANCE IS LOCATED WITHIN A BEDROOM OR ITS ATTACHED BATHROOM, CARBON MONOXIDE DETECTION SHALL BE INSTALLED WITHIN THE BEDROOM.

2. ALL ELECTRIC WORK SHALL BE PERFORMED IN STRICT ACCORDANCE WITH THE LATEST EDITION OF THE N.E.C.

4. ALL CONDITIONS AND DIMENSIONS TO BE VERIFIED IN FIELD BY THE GENERAL CONTRACTOR AND REPORT ANY DISCREPANCIES TO ARCHITECT PRIOR TO START OR CONTINUATION OF WORK

5. NO GALV. NAILS OR CONNECTORS IN ACQ. LUMBER ARE PERMITTED. ALL CONNECTORS AND FASTENERS FOR ACQ LUMBER MUST BE STAINLESS STEEL OR HOT DIPPED GALVANIZED G-185.

6. AS PER 2015 IRC SEC. R310 EACH HABITABLE ROOM SHALL HAVE AT LEAST ONE OPERABLE WINDOW FOR EMERGENCY EGRESS WITH A MINIMUM CLEAR OPENING OF 5.7 SQ. FT. (GRADE FLOOR OPENINGS SHALL HAVE A MINIMUM CLEAR OPENING OF 5.0 SQ. FT.). THE MIN. HT. OF OPENINGS TO BE 24" AND MINIMUM WIDTH TO BE 20" AND THE BOTTOM OF OPENINGS NO HIGHER THAN 3'-8" A.F.F.

7. ALL WOOD POSTS SHALL BE BUILT UP WITH (2) 2X4'S NAILED TOGETHER W/ 10d NAILS @ 8" O.C. UNLESS OTHERWISE NOTED

8. ALL FRAMING SHALL COMPLY WITH THE 2015 INTERNATIONAL RESIDENTIAL CODE

9. ALL EXTERIOR PORCH/DECK/ STAIR FRAMING TO BE ACQ LUMBER-U.O.N.

10. ALL ELECTRIC TO REMAIN AND MODIFIED TO ACCOMMODATE NEW CONSTRUCTION. FINAL ELECTRIC TO BE DETERMINE IN THE FIELD

11. ALL ANCHORS, STRAPPING AND CONNECTORS AND HARDWARE TO BE SIMPSON STRONG TIE OR AN APPROVED MANUFACTURE AND TO BE INSTALLED AS PER MANUFACTURE WRITTEN INSTRUCTIONS- UNLESS OTHERWISE NOTED

12. ALL ENGINEERED LUMBER TO BE CLADDED AND SEAL AS REQUIRED TO PROTECT AGAINST THE WEATHER ENVIRONMENT

DEMOLITION NOTES:

1. REMOVE PARTITIONS SHOWN TO BE REMOVED AS NOTED ON DWGS.- SHORE AS REQ'D AT LOAD BEARING PARTITIONS

2. CONTRACTOR SHALL BE CAREFUL AS TO NOT DAMAGE EXISTING CONSTRUCTION THAT REMAIN AND SHALL REPAIR ANY OF THESE DAMAGES AS REQUIRED.

3. CONTRACTOR SHALL RE-ROUTE, RELOCATE OR REMOVE (AS REQ'D) ALL EXISTING ELECTRICAL, PLUMBING AND HEATING LINES THAT INTERFERE WITH NEW CONSTRUCTION.

WALL KEY

- EXIST TO BE REMOVED
- EXIST TO REMAIN
- NEW WOOD FRAME CNST
- NEW POURED CONCRETE
- 4"x4" POST UNLESS OTHERWISE NOTED
- HOLD DOWN AS NOTED
- HARD WIRED SMOKE DETECTOR W/ BATTERY BACK-UP
- 80 CFM FAN TO EXTERIOR
- HARD WIRED CARBON MONOXIDE DETECTOR W/ BATTERY BACK-UP MIN 12' A.F.F. AS PER SECT. 1225.2 IRC CODE
- DENOTES EGRESS WINDOW

TOC ARCHITECTS
TODD O'CONNELL ARCHITECT P.C.
TODD O'CONNELL, AIA
1200 Veterans Memorial Highway
Suite 120
Hauppauge, NY 11788
P (631) 650-6666
F (631) 650-6667
C (516) 658-0325
www.tocarchitects.com
todd@tocarchitects.com

CONSULTANTS:

NYS LIC #027935

CHECKED BY: TOC

DRAWN BY: JCZ

REV #:	DATE:	NOTE:	BY:

PROPOSED ADDITION
LI RESIDENCE
424 LOCUST AVENUE
CENTRE ISLAND, NY 11530

DRAWING:

JOB#: LI-17-243
DATE: 02.24.20
SCALE: AS NOTED

DRAWING NUMBER
A.5

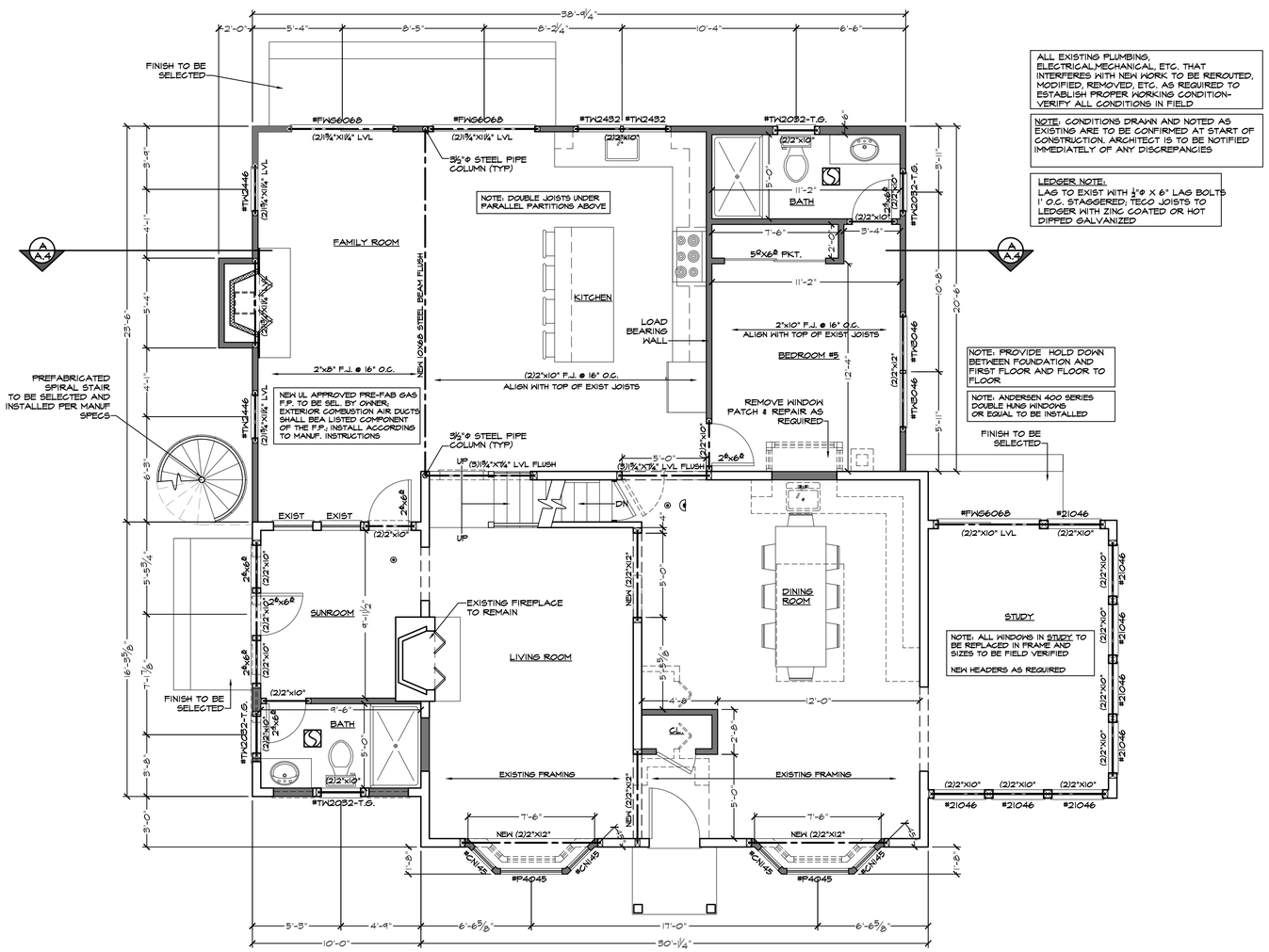

FIRST FLOOR PLAN

SCALE: 1/4" = 1'-0"

GENERAL NOTES

1. CARBON MONOXIDE ALARMS AND CARBON MONOXIDE DETECTORS SHALL BE INSTALLED IN BUILDINGS AS REQUIRED IN ACCORDANCE WITH SECTION 915.2 OF 2015 IFC (CARBON MONOXIDE DETECTION SYSTEMS) FOR RESIDENTIAL BUILDINGS . INTER-WIRED FIRE/SMOKE AND CARBON MONOXIDE DETECTORS WITH BATTERY BACKUP AS PER NFPA 72 AND 2015 INTERNATIONAL RESIDENTIAL CODE SEC. R314 AND R315 SHALL BE INSTALLED IN DWELLING UNITS OUTSIDE OF EACH SEPARATE SLEEPING AREA IN THE VICINITY OF THE BEDROOMS, WHERE A FUEL-BURNING APPLIANCE IS LOCATED WITHIN A BEDROOM OR ITS ATTACHED BATHROOM, CARBON MONOXIDE DETECTION SHALL BE INSTALLED WITHIN THE BEDROOM.

2. ALL ELECTRIC WORK SHALL BE PERFORMED IN STRICT ACCORDANCE WITH THE LATEST EDITION OF THE N.E.C.

4. ALL CONDITIONS AND DIMENSIONS TO BE VERIFIED IN FIELD BY THE GENERAL CONTRACTOR AND REPORT ANY DISCREPANCIES TO ARCHITECT PRIOR TO START OR CONTINUATION OF WORK

5. NO GALV. NAILS OR CONNECTORS IN ACQ. LUMBER ARE PERMITTED. ALL CONNECTORS AND FASTENERS FOR ACQ LUMBER MUST BE STAINLESS STEEL OR HOT DIPPED GALVANIZED G-185.

6. AS PER 2015 IRC SEC. R310 EACH HABITABLE ROOM SHALL HAVE AT LEAST ONE OPERABLE WINDOW FOR EMERGENCY EGRESS WITH A MINIMUM CLEAR OPENING OF 5.7 SQ. FT. (GRADE FLOOR OPENINGS SHALL HAVE A MINIMUM CLEAR OPENING OF 5.0 SQ. FT.). THE MIN. HT. OF OPENINGS TO BE 24" AND MINIMUM WIDTH TO BE 20" AND THE BOTTOM OF OPENINGS NO HIGHER THAN 3'-8" A.F.F.

7. ALL WOOD POSTS SHALL BE BUILT UP WITH (2) 2X4'S NAILED TOGETHER W/ 10d NAILS @ 8" O.C. UNLESS OTHERWISE NOTED

8. ALL FRAMING SHALL COMPLY WITH THE 2015 INTERNATIONAL RESIDENTIAL CODE

9. ALL EXTERIOR PORCH/DECK/ STAIR FRAMING TO BE ACQ LUMBER-U.O.N.

10. ALL ELECTRIC TO REMAIN AND MODIFIED TO ACCOMMODATE NEW CONSTRUCTION. FINAL ELECTRIC TO BE DETERMINE IN THE FIELD

11. ALL ANCHORS, STRAPPING AND CONNECTORS AND HARDWARE TO BE SIMPSON STRONG TIE OR AN APPROVED MANUFACTURE AND TO BE INSTALLED AS PER MANUFACTURE WRITTEN INSTRUCTIONS- UNLESS OTHERWISE NOTED

12. ALL ENGINEERED LUMBER TO BE CLADDED AND SEAL AS REQUIRED TO PROTECT AGAINST THE WEATHER ENVIRONMENT

DEMOLITION NOTES:

1. REMOVE PARTITIONS SHOWN TO BE REMOVED AS NOTED ON DWGS.- SHORE AS REQ'D AT LOAD BEARING PARTITIONS

2. CONTRACTOR SHALL BE CAREFUL AS TO NOT DAMAGE EXISTING CONSTRUCTION THAT REMAIN AND SHALL REPAIR ANY OF THESE DAMAGES AS REQUIRED.

3. CONTRACTOR SHALL RE-ROUTE, RELOCATE OR REMOVE (AS REQ'D) ALL EXISTING ELECTRICAL, PLUMBING AND HEATING LINES THAT INTERFERE WITH NEW CONSTRUCTION.

WALL KEY

- EXIST TO BE REMOVED
- EXIST TO REMAIN
- NEW WOOD FRAME CNST
- NEW POURED CONCRETE
- 4"x4" POST UNLESS OTHERWISE NOTED
- HOLD DOWN AS NOTED
- HARD WIRED SMOKE DETECTOR W/ BATTERY BACK-UP
- 80 CFM FAN TO EXTERIOR
- HARD WIRED CARBON MONOXIDE DETECTOR W/ BATTERY BACK-UP MIN 12' A.F.F. AS PER SECT. 1225.2 IRC CODE
- DENOTES EGRESS WINDOW

TOC ARCHITECTS
TODD O'CONNELL ARCHITECT P.C.
TODD O'CONNELL, AIA
1200 Veterans Memorial Highway
Suite 120
Hauppauge, NY 11788
P (631) 650-6666
F (631) 650-6667
C (516) 658-0325
www.tocarchitects.com
todd@tocarchitects.com

CONSULTANTS:

NYS LIC #027935

THE DRAWINGS, SPECIFICATIONS AND OTHER DOCUMENTS PREPARED BY THE ARCHITECT FOR THIS PROJECT ARE THE INSTRUMENTS OF THE ARCHITECT AND THE ARCHITECT SHALL BE DEEMED THE AUTHOR OF THE DOCUMENTS AND SHALL RETAIN ALL COMMON LAW, STATUTORY AND OTHER RESERVED RIGHTS INCLUDING COPYRIGHT. THE DRAWINGS, SPECIFICATIONS AND OTHER DOCUMENTS PREPARED BY THE ARCHITECT FOR THIS PROJECT ARE NOT TO BE USED BY THE OWNER OR OTHERS ON OTHER PROJECTS, FOR ADDITIONS TO THIS PROJECT OR FOR COMPLETION OF THIS PROJECT BY OTHERS.

CHECKED BY: TOC

DRAWN BY: JCZ

REV #:	DATE:	NOTE:	BY:

PROPOSED ADDITION
LI RESIDENCE
424 LOCUST AVENUE
CENTRE ISLAND, NY 11530

DRAWING:

JOB#: LI-17-245
DATE: 02.24.20
SCALE: AS NOTED

DRAWING NUMBER
A.6

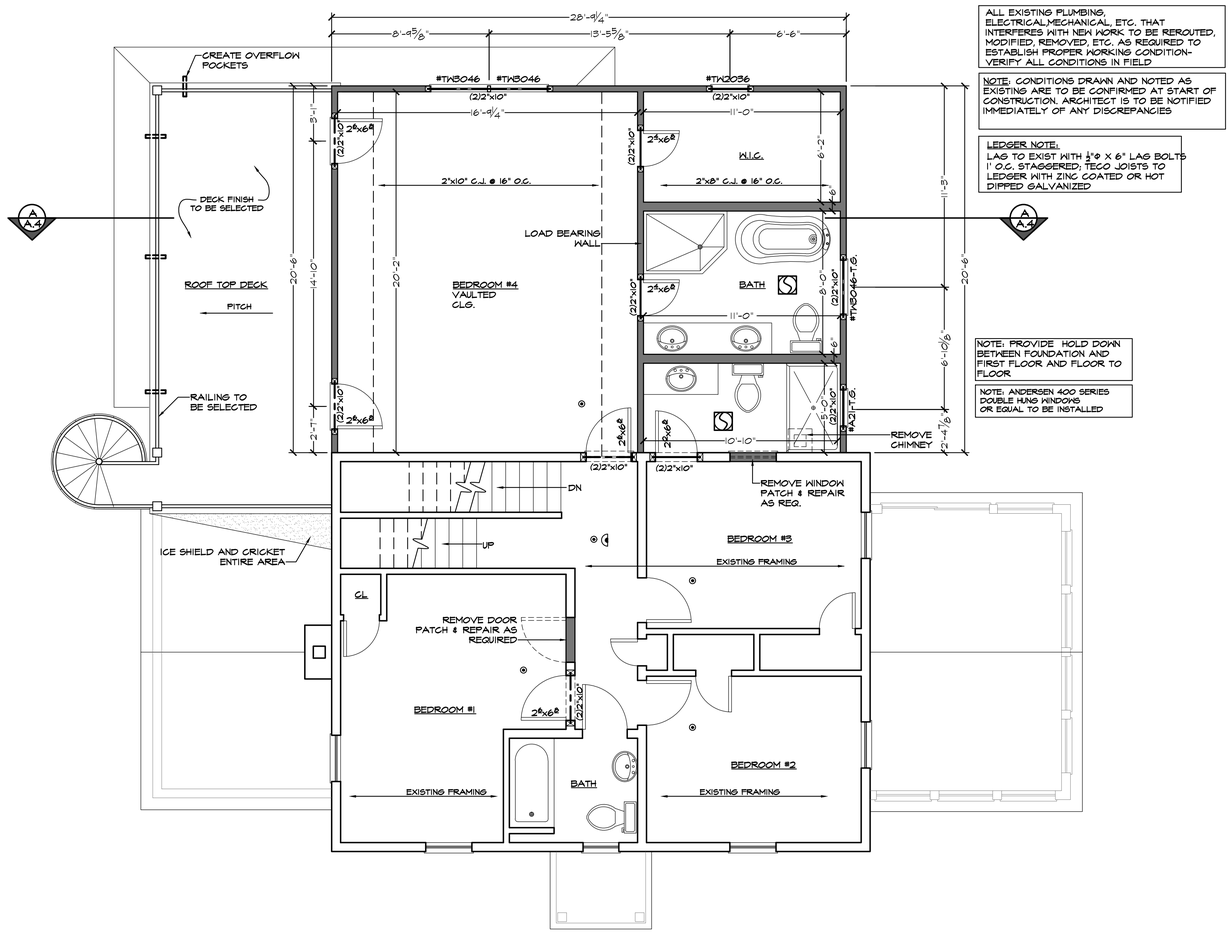

ALL EXISTING PLUMBING, ELECTRICAL,MECHANICAL, ETC. THAT INTERFERES WITH NEW WORK TO BE REROUTED, MODIFIED, REMOVED, ETC. AS REQUIRED TO ESTABLISH PROPER WORKING CONDITION- VERIFY ALL CONDITIONS IN FIELD

NOTE: CONDITIONS DRAWN AND NOTED AS EXISTING ARE TO BE CONFIRMED AT START OF CONSTRUCTION. ARCHITECT IS TO BE NOTIFIED IMMEDIATELY OF ANY DISCREPANCIES

LEDGER NOTE:
LAG TO EXIST WITH ½"Ø X 6" LAG BOLTS 1' O.C. STAGGERED; TECO JOISTS TO LEDGER WITH ZINC COATED OR HOT DIPPED GALVANIZED

NOTE: PROVIDE HOLD DOWN BETWEEN FOUNDATION AND FIRST FLOOR AND FLOOR TO FLOOR

NOTE: ANDERSEN 400 SERIES DOUBLE HUNG WINDOWS OR EQUAL TO BE INSTALLED

SECOND FLOOR PLAN

SCALE: 1/4" = 1'-0"

GENERAL NOTES

1. CARBON MONOXIDE ALARMS AND CARBON MONOXIDE DETECTORS SHALL BE INSTALLED IN BUILDINGS AS REQUIRED IN ACCORDANCE WITH SECTION 915.2 OF 2015 IFC (CARBON MONOXIDE DETECTION SYSTEMS) FOR RESIDENTIAL BUILDINGS . INTER-WIRED FIRE/SMOKE AND CARBON MONOXIDE DETECTORS WITH BATTERY BACKUP AS PER NFPA 72 AND 2015 INTERNATIONAL RESIDENTIAL CODE SEC. R314 AND R315 SHALL BE INSTALLED IN DWELLING UNITS OUTSIDE OF EACH SEPARATE SLEEPING AREA IN THE VICINITY OF THE BEDROOMS, WHERE A FUEL-BURNING APPLIANCE IS LOCATED WITHIN A BEDROOM OR ITS ATTACHED BATHROOM. CARBON MONOXIDE DETECTION SHALL BE INSTALLED WITHIN THE BEDROOM.

2. ALL ELECTRIC WORK SHALL BE PERFORMED IN STRICT ACCORDANCE WITH THE LATEST EDITION OF THE N.E.C.

4. ALL CONDITIONS AND DIMENSIONS TO BE VERIFIED IN FIELD BY THE GENERAL CONTRACTOR AND REPORT ANY DISCREPANCIES TO ARCHITECT PRIOR TO START OR CONTINUATION OF WORK

5. NO GALV. NAILS OR CONNECTORS IN ACQ. LUMBER ARE PERMITTED. ALL CONNECTORS AND FASTENERS FOR ACQ LUMBER MUST BE STAINLESS STEEL OR HOT DIPPED GALVANIZED G-185.

6. AS PER 2015 IRC SEC. R310 EACH HABITABLE ROOM SHALL HAVE AT LEAST ONE OPERABLE WINDOW FOR EMERGENCY EGRESS WITH A MINIMUM CLEAR OPENING OF 5.7 SQ. FT. (GRADE FLOOR OPENINGS SHALL HAVE A MINIMUM CLEAR OPENING OF 5.0 SQ. FT.). THE MIN. HT. OF OPENINGS TO BE 24" AND MINIMUM WIDTH TO BE 20" AND THE BOTTOM OF OPENINGS NO HIGHER THAN 3'-8" A.F.F.

7. ALL WOOD POSTS SHALL BE BUILT UP WITH (2) 2X4'S NAILED TOGETHER W/ 10d NAILS @ 8" O.C. UNLESS OTHERWISE NOTED

8. ALL FRAMING SHALL COMPLY WITH THE 2015 INTERNATIONAL RESIDENTIAL CODE

9. ALL EXTERIOR PORCH/DECK/ STAIR FRAMING TO BE ACQ LUMBER-U.O.N.

10. ALL ELECTRIC TO REMAIN AND MODIFIED TO ACCOMMODATE NEW CONSTRUCTION. FINAL ELECTRIC TO BE DETERMINE IN THE FIELD

11. ALL ANCHORS, STRAPPING AND CONNECTORS AND HARDWARE TO BE SIMPSON STRONG TIE OR AN APPROVED MANUFACTURE AND TO BE INSTALLED AS PER MANUFACTURE WRITTEN INSTRUCTIONS- UNLESS OTHERWISE NOTED

12. ALL ENGINEERED LUMBER TO BE CLADDED AND SEAL AS REQUIRED TO PROTECT AGAINST THE WEATHER ENVIRONMENT

DEMOLITION NOTES:

1. REMOVE PARTITIONS SHOWN TO BE REMOVED AS NOTED ON DWGS.- SHORE AS REQ'D AT LOAD BEARING PARTITIONS

2. CONTRACTOR SHALL BE CAREFUL AS TO NOT DAMAGE EXISTING CONSTRUCTION THAT REMAIN AND SHALL REPAIR ANY OF THESE DAMAGES AS REQUIRED.

3. CONTRACTOR SHALL RE-ROUTE, RELOCATE OR REMOVE (AS REQ'D) ALL EXISTING ELECTRICAL, PLUMBING AND HEATING LINES THAT INTERFERE WITH NEW CONSTRUCTION.

WALL KEY

- EXIST TO BE REMOVED
- EXIST TO REMAIN
- NEW WOOD FRAME CNST
- NEW POURED CONCRETE
- 4"x4" POST UNLESS OTHERWISE NOTED
- HOLD DOWN AS NOTED
- HARD WIRED SMOKE DETECTOR W/ BATTERY BACK-UP
- 80 CFM FAN TO EXTERIOR
- HARD WIRED CARBON MONOXIDE DETECTOR W/ BATTERY BACK-UP MIN 12' A.F.F. AS PER SECT. 1225.2 IRC CODE
- DENOTES EGRESS WINDOW

TOC ARCHITECTS
TODD O'CONNELL ARCHITECT P.C.
TODD O'CONNELL, AIA
1200 Veterans Memorial Highway
Suite 120
Hauppauge, NY 11788
P (631) 650-6666
F (631) 650-6667
C (516) 658-0325
www.tocarchitects.com
todd@tocarchitects.com

CONSULTANTS:

NYS LIC #027935

CHECKED BY: TOC

DRAWN BY: JCZ

REV #:	DATE:	NOTE:	BY:

PROPOSED ADDITION
LI RESIDENCE
424 LOCUST AVENUE
CENTRE ISLAND, NY 11530

DRAWING:

JOB#: LI-17-293
DATE: 02.24.20
SCALE: AS NOTED

DRAWING NUMBER
A.1

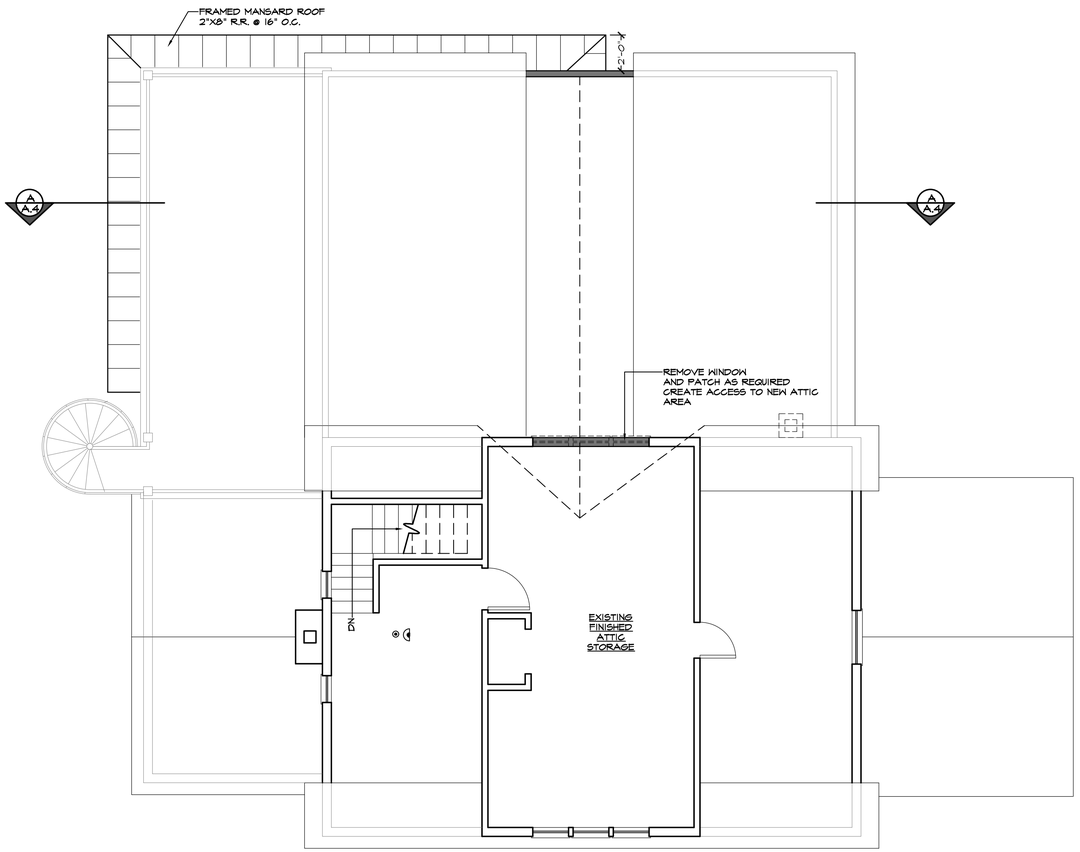

EXISTING ATTIC PLAN

SCALE: 1/4" = 1'-0"

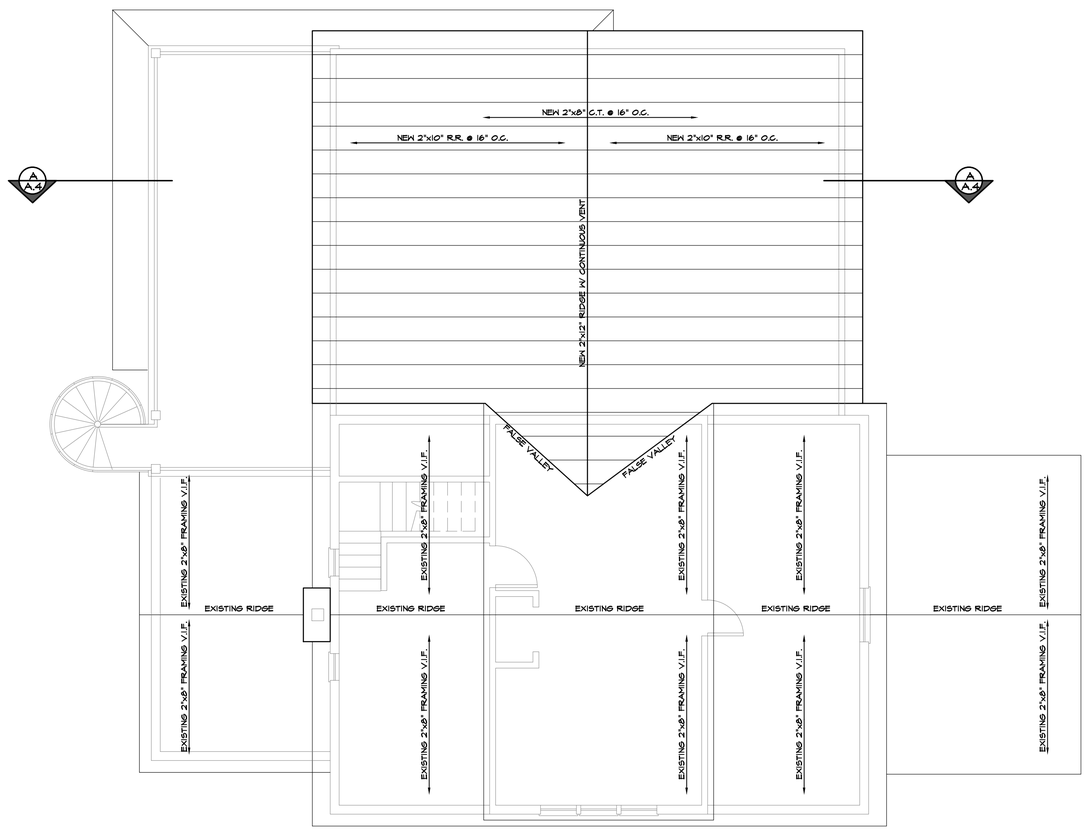

ROOF PLAN

SCALE: 1/4" = 1'-0"

TOC ARCHITECTS
TODD O'CONNELL ARCHITECT P.C.
TODD O'CONNELL, AIA
1200 Veterans Memorial Highway
Suite 120
Hauppauge, NY 11788
P (631) 650-6666
F (631) 650-6667
C (516) 658-0325
www.tocarchitects.com
todd@tocarchitects.com

CONSULTANTS:

NYS LIC #027935

CHECKED BY: TOC

DRAWN BY: JCZ

REV #:	DATE:	NOTE:	BY:

PROPOSED ADDITION
LI RESIDENCE
424 LOCUST AVENUE
CENTRE ISLAND, NY 11530

DRAWING:

JOB#: LI-17-243
DATE: 02.24.20
SCALE: AS NOTED

DRAWING NUMBER
A.3

EXTERIOR MATERIALS:

OWENS CORNING DURATION DESIGNER ASPHALT SHINGLE
COLOR: PACIFIC WAVE

CERTAINTEED CEDAR BOARDS INSULATED SIDING
COLOR: HERITAGE CREAM
7" EXPOSURE

ANDERSEN WINDOWS
COLOR: WHITE

WINDOW TRIM
COLOR:WHITE

CORNER BOARD 6" EXPOSURE
COLOR: WHITE

ALL SOFFITS AND DECORATIVE PANELING
COLOR: WHITE

WROUGHT IRON STAIRCASE

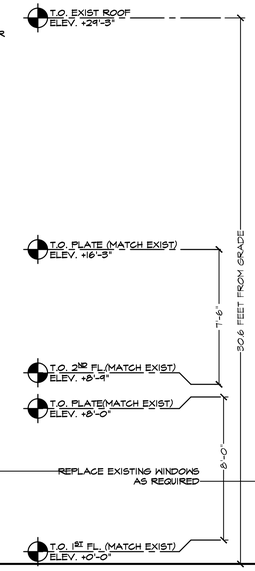

FRONT ELEVATION

SCALE: 1/4" = 1'-0"

SIDE ELEVATION

SCALE: 1/4" = 1'-0"

EXTERIOR MATERIALS:

OWENS CORNING DURATION DESIGNER ASPHALT SHINGLE
COLOR: PACIFIC WAVE

CERTAINTEED CEDAR BOARDS INSULATED SIDING
COLOR: HERITAGE CREAM
7" EXPOSURE

ANDERSEN WINDOWS
COLOR: WHITE

WINDOW TRIM
COLOR:WHITE

CORNER BOARD 6" EXPOSURE
COLOR: WHITE

ALL SOFFITS AND DECORATIVE PANELING
COLOR: WHITE

WROUGHT IRON STAIRCASE

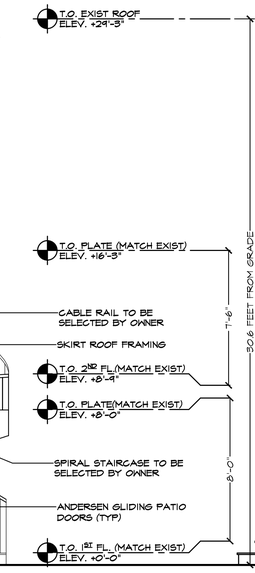

REAR ELEVATION

SCALE: 1/4" = 1'-0"

SIDE ELEVATION

SCALE: 1/4" = 1'-0"

CONSULTANTS:

NYS LIC #027935

CHECKED BY: TOC

DRAWN BY: JCZ

REV #:	DATE:	NOTE:	BY:

PROPOSED ADDITION
LI RESIDENCE
424 LOCUST AVENUE
CENTRE ISLAND, NY 11530

DRAWING:

JOB#: LI-17-243
DATE: 02.24.20
SCALE: AS NOTED

DRAWING NUMBER
A.3